HIKARI® 富山

FOCUSING ON
NEW TECHNOLOGY AND AUTOMATION
专注新技术与自动化

HW800T C系列

COMPUTERIZED DIRECT-DRIVE
MULTI-NEEDLE MACHINE
电脑直驱多针一体机

使用说明书
INSTRUCTION MANUAL BOOK

CE

BM TRADA CERTIFICATION ISO 9001: 2008 UKAS QUALITY MANAGEMENT 012

通过ISO9001:2008
质量管理体系认证

使用说明书 INSTRUNCTION MANUAL

对于您购买敝公司的多针机系列缝纫机，我们表示衷心的感谢！

Thank you very much for purchasing multi-needle series machine.

在使用缝纫机之前，请认真阅读此说明书。

Please read this manual in detail before operating the machine.

愿您自始至终爱护并使用敝公司的产品。

We hope you could use and love products from our company throughout.

另外，为使您的缝纫机高效率的使用，此说明书介绍了有关日常中检查与安全的注意事项。

In order to use the machine efficiently, this instruction manual describes daily routine maintenance and safety precautions.

在平时，除了对缝纫机进行检查之外，也请您多加注意自身的安全，做到安全使用。这是我们的心愿。

Besides inspecting the machine, please note the safety of yourself, we hope you could use our machine safely.

注记 Note

- 此使用说明书所记载的内容只是以提供信息为目的，有未通告而变更的可能。
  请正确掌握这些信息，如错误理解本书中任何信息，而导致任何损失，本公司将不承担任何责任。
  All contents in the manual are in order to provide information of how to use machine, it is possible that we do not notice change.
  Please master the information in the manual correctly, such as the wrong interpretation of any information in this manual, which results in any loss, the company will not bear any responsibility.

- 敝公司本着不断优化产品结构和改良产品性能的方针，本产品将有可能引入最先进的技术，因此，保留未预告而变更规格、设计的权利。这对于本书的规格一章中记载的所有型号及子型号的产品有效。
  In order to optimize the product series and improve product characteristics, we maybe introduce advanced technology to this product, so we keep the right to revise specification, design without notice in advance. This provision shall be valid to all the models and sub-models in the chapter of specification.

目 录 CONTENTS

1. 前言 Preface……5
2. 安全措施 Security
- 用途·目的 Usage-Purpose ……5
- 使用环境 Using environment ……5
- 安全措施 Safety measures ……5

3.各操作过程的注意事项 Operation Cautions
- 开箱 Opening ……6
- 搬运 Moving ……7
- 安装·准备 Installation ……7
- 使用缝纫机油 Sewing Oil Using……8
- 运转缝纫机前的注意事项 Cautions before running ……8
- 运转缝纫机中的注意事项 Cautions when running ……8
- 维护、检查、修理 ……9

4.安全保护装置 security equipment
- 护目镜 eyes’ guard……9
- 压脚 Presser Foot……9

5.日常操作中了解的常识问题 General Knowledge of Operations
- 机器速度 Machine speed ……10
- 台板加工图 Table Drawing ……10
- 机器的安装 Machine Installation ……11
- 润滑油的注入与更换 Oil Filling And Changing……11
- 更换针 Change Needle ……13
- 穿线方法 Threading Method……13
- 缝线张力调整 Stitch Tension Adjusting……15
- 针距调整 Stitch Length Adjusting ……15
- 压脚压力调整 Preeser Foot Presure Adjusting……16
- 压脚调整 Presser Foot Adjusting……16
- 压脚高度调整 Presser Foot Height Adjusting ……16
- 气路部分安装示意图 Air Portion Installation Drawing……17
- 调整切线速度 Adjusting Cutting Speed ……17
- 调整工作气压 Adjusting Air pressure……18
- 踏板控制器 Pedal Control Asm.……18
- 调整动刀 Adjusting The Movable Knife ……18
- 调整定刀 Adjusting The Stationary Knife……19
- 剪线过程示意图 Cutting Procedure Sketch Map……19
- 调整吹气口 Adjusting The Air Wiper ……20
- 护针的安装与调试 Needle Guard Installation & Testing ……20
- 弯针的安装与调试 Looper Installation & Testing ……21
- 弯针退距调整 Looper Back Distance Adjusting……21
- 机针高度调整 Needle Height Adjusting……22

- 弯针调整 Looper Adjusting……23
- 拨针的定位 Adjusting The Retainer Looper ……23
- 送料牙调整 Feed Dog Adjusting……24
- 勾针与拨针的时位关系 Timming Of The Looper And The Retainer Looper ……24
- 上下滚轮的调整 Upper& Lower Puller Adjusting ……25
- 上滚轮压力的调整 Upper Puller Pressure Adjusting ……25
- 线的张力调节 Thread Tension Adjusting ……25
- 线量控制板位置调整 Thread Amount Control Board Position Adjusting ……26
- 面线收紧调节 Upper Thread Tightening Adjusting ……26
- 打线杆的时位关系 Timming Of The Wiper Bar ……26
- 清洁机器 Cleaning……27

1. 前 言 Preface

- 本操作说明书将描述如何安全使用本产品。 This operation manual will describe how to use the machine safely.
- 在使用本产品之前，务必阅读此书，在充分理解掌握缝纫机的操作、检查、调整、维修等方法之后，方可使用。Before using this machine, be sure to read this manual in detail and master the operation, inspection, adjustment and maintenance.
- 工业用缝纫机是在缝制作业时，操作者近距离操作缝纫机，有接触缝纫机运动部件的危险，这点应充分认识。因此，为了确保操作者的人身安全，本公司提供了安全的产品和安全操作的使用说明。使用缝纫机的有关人员务必熟读此说明书，在实施必要的安全对策之后，再使用缝纫机。Please fully recognize that the operator may be under the danger of contact with moving parts of sewing machine during operation. So we supply safe product and safety operation manual in order to insure the safety of operator. Only after the operator read this manual in detail and carry out necessary safety measures, the operator can use the machine.

2. 安全措施 Safety measures

➢ 用途・目的 Usage

本公司的缝纫机用于服装业，是以提高服装业的质量和生产率为目的而研究开发的产品。因此除以上用途外，请绝对不要使用。 We R&D products to improve the quality and productivity of garment industry. The sewing machines from our company are for garment industry. Apart from above purpose, please do not use it.

➢ 使用环境 Working environment

本公司的缝纫机因使用环境的不同，有可能对缝纫机的寿命和性能产生不良影响。为了确保安全，请勿在下述环境条件之下使用。The life and characteristics will be affected if use our machines in different working environment. In order to ensure safety, please do not use machines under following condidtions.

1. 高频焊接机等产生干扰的机器设备旁边。Near High-frequency welding machines and other machines which will generate interference.
2. 产生药品蒸气气氛的地方，及受药品飞溅等地方。Place where generate drug atmosphere or where drug splash.
3. 屋外、高温高湿、直接曝晒阳光的地方。Outside, high temperature and high humidity, exposure to sunlight directly.
4. 周围的温度、湿度很大的地方。In place where temperature and humidity are high.
5. 额定电压常超过±10％以上的电压变动较大的地方。The rated voltage always beyond ±10% or the rated voltage always change largely.

➢ 安全措施 Safety measures

（1）进行维修保养、检验时的安全保护 Security protection during maintenance and inspecting machines.

- 对缝纫机进行检查、修理、清扫等维护作业时，请切断电源，将电源插头从插座上拔下之后进行。当有必要接通电源进行作业时，请制定防止缝纫机意外转动或操作错误而导致危险的安全操作准则，并遵守一切安全防护准则。Please turn off the power switch when inspect, repair and

clean machines. If it is necessary to operate with power on, please make the safety operation regulation to avoid any danger caused by accidental rotation or wrong operation, and please comply with the regulation during operation.

- 在进行以下作业时，务必关掉电源开关，将电源插头从插座上拔下之后进行。Please be sure to turn off the power switch when conduct the following operations.
  - 加油 refueling
  - 穿线 threading the needle
  - 打扫缝纫机 Cleaning the machine
  - 换机针 Replacing needle
  - 进行供油元件的清扫和更换 Cleaning or replacing oil components
  - 更换机油 Replacement of oil
- 实施定期检修、保养时，应限由专业技术员进行。Should be detected and maintained by the professional technician regularly.
- 请勿擅自改造或更改缝纫机，以免导致事故的发生。Please don’t change the machine parts or functions to avoid accidence.

※如有改造或更改的需要，应与经销商或本公司销售部联系。If necessary to change, please contact the agents or contract our company sales department.

（2）开始运转前的检验事项 Inspection before running.

- 在开始操作运转缝纫机前，先检查缝纫机缝纫部分，看是否有损伤、功能不良等问题。万一有异常现象时，应马上修理或采取必要的措施。Before running, please check the sewing portion, check if there is any damage or problems, if have any problem, please send to repair immediately.
- 在使用缝纫机之前，务必确认压脚是否处于正确位置。(用手轻轻转动手轮，看针尖是否落在压脚的槽口中心）Before sewing, please check if the presser foot is on the right position.(turn round the hand wheel slowly, check if the needle is in the middle of presser foot hole.
- 务必检查压脚是否固定牢固。(使用抬压脚机构抬起压脚，用手前后左右扳动，检查看压脚是否松动）have to check if the presser foot is firm. (lift the presser foot with presser foot lifting ASM, checking the presser foot is firm or not with hands).

（3） 培训・进修 Training

- 为了防止事故的发生，缝纫机的操作人员及维修保养专员，应先学会所需知识和有关技能，以保证工作的安全。To avoid accidence, operators and technicians need to master the skills to insure the security.

3. 各操作过程的注意事项 Cautions.

➢ 开箱 Opening

1. 缝纫机出厂时是包装好后装入纸箱运出的。从印刷在纸箱上的标记字样确认上下后，请从上到下按顺序开箱。Sewing machine are packed with cartons. Please open the carton from top to bottom.
2. 把缝纫机机头从缓冲包装材料里拿出时，不要提拿与机针部位或过线器等有关的部件，以免会发生危险或损伤机器。When take out the machine head from cartons ,please don’t touch needle portion or thread tension ASM to avoid accidence.
3. 在取出缝纫机机头时，请注意重心的位置，小心谨慎的取出。Be careful of focus when take out

the machine head.

4. 开箱用过的纸箱如果以后还用的话，请保存放好。Please keep the carton after take out the machines.

包装材料的处理 package treatment.

● 请客户负责任的将包装材料正确适当的进行处理。Please deal with packages in right way.

※有油污的部件务必遵照当地环境保护的有关规定，分别进行处理。Polluted parts should be treated according to the local environment laws.

➢ 搬运 Moving

1. 缝纫机的搬运一定要两个人以上进行。另外，人工搬运应只限于搬往缝纫机台板或小台车上。Please move the machine with at least 2 persons.
2. 移动缝纫机机头时，用右手抓住扳手，左手垮在机头里，牢固的搬起。在往缝纫机台板上或小台车上搬运时，请注意不要过分冲击或震动，以免缝纫机倒斜造成危险。When move machine heads. Hold the hand wheel with right hand, hold machine head with left hand. Soft landing.
3. 如果要第二次运送缝纫机并要包装时，请一定擦干净机头上的油污。否则，搬运时会滑脱摔坏机头或油污使包装材料变质穿底。 If need to pack after using, please clean the oil first to avoid slip or package pollution.

➢ 安装·准备 Installation& preparation.

缝纫机台板 Sewing machine table

1. 请使用能充分承受缝纫机机头重量的缝纫机台板（台板、铁架）。Please use table&stand strong enough for the weight of machine head
2. 应充分考虑操作光线的明亮度，放置在光线明亮的环境中作业。如果光线不是十分明亮时，应根据需要安装照明电灯。Please operate under brightness, if the brightness is not enough, please install lights according to actual situations.
3. 在运转缝纫机时，为了防止操作者踩踏板时脚滑脱造成事故，一定要在缝纫机踏板上安装防止滑脱的垫子。When running sewing machine, to avoid operators slip on the padels, please install padel pat.
4. 在考虑操作者操作姿势的前提下，决定台板面的高度（工作时的高度）。Adjust the heighth according to the requirement of operators.

接线 Line connections.

1. 务必在将电源切断的状态下，把缝纫机与电控箱相对应的连接线连接好。Power off when connect the lines between sewing machine and control box.
2. 在连接时请不要用力地拉、拽连接线。Please don’t use too heavy strength to pull the connection lines.
3. 请不要过度弯曲连接线。Please don’t band connection lines too much.
4. 连接线与运动部件的最小距离为 25mm。Connection line should be away from moving parts more than 25mm.
5. 必要时考虑加防护罩来保护连接线。Use covers to protect lines when neccesary.
6. 固定连接线时绝对不要使用金属丝捆绑。Don’t bunch connection lines with metal line.

接地 Land connect line

1. 接地线是按每台缝纫机分别装设专用的接地线，不应与其他机器共用。One machine uses one line.
2. ⏚ 在缝纫机机头的规定位置正确地装好接地线。 Connect the line in right way.

➢ 使用缝纫机油 Sewing machine oil

1. 在油盘内没有注入油以前绝对不要进行运转。机油请使用指定的缝纫机专用润滑油。(相当于 ISO 粘度等级 VG22)。Don’t run machine before filling oil. Please lubricate machine with special oil.(ISO VG22)
2. 机油进入眼睛会使眼睛发炎，所以在使用时请戴防护眼镜以免机油进入眼睛。Oil can injure eyes,please ware glasses to protect eyes.

※万一进入眼睛，请用干净水冲洗，再请医生治疗。If the oil get into eyes, please clean eyes with clean water then go to doctor.

3. 绝对不要使机油进入口腔。Never let oil touch your mouth.
4. 机油请保管在孩子摸不到的地方。万一进入口腔，不要硬性呕吐，马上请医生进行治疗。Please put oil away from children. If oil get into mouth, don’t vomit only, must go to see doctor immediately.
5. 废油、废容器的处理必须遵照相关法令正确处理。如不知道时请与购买部门联系后，正确进行处理。Waste oil and waste containers should be treated according to local laws.

➢ 运转缝纫机前的注意事项 Cautions before running.

1. 打开电源前，请确认接线或接头没有损伤、脱落、松动等外观上的异常。Before power on, please check the wire and plug is safe and firm.
2. 打开电源时，请不要将手放在机针附近。When opening, don’t put hands near needle.
3. 操作者应受过适当训练、充分理解使用说明书的内容之后再进行操作使用。Operator should be trained and read the manual book then start to operate.
4. 关于缝纫机机头上的危险、警告标志应熟读并理解。Please read and understand all caution notes on the machine head.
5. 最初使用的一个月应降低速度。请使用在最高转速的 3/4 以下的转速。During the first month of using, please turn down the speed, the speed should be less than 3/4 of MAX speed.

➢ 运转缝纫机中的注意事项 Cautions when running

1. 在拆卸下护目镜、传动护罩等安全装置后，请不要运转缝纫机。When taking off the eyes’ guard or motor cover or any else security equipments ,please don’t run machines.
2. 缝纫机在运转中是很危险的，绝对不要将手放入机针下。When machine running ,it is dangerous, please don’t put hands under needle.
3. 缝纫机在运转中有危险，手指、头发、衣服请勿靠近针杆等运动部件附近。When machine running ,it is dangerous. Please don’t make fingers ,hair, cloth close to needle bar or other moving portion.
4. 在不使用缝纫机时或者操作者离开缝纫机时，一定要切断电源。When no need to use sewing machine or leave seats, please power off.
5. 停电时务必将电源关掉。When have no power please take off the plug.
6. 在操作缝纫机时，请穿着不易被机械卷入的服装。When operate sewing machines, please ware cloth which not easy to be involved by machine.
7. 缝纫机在运转中，请不要在缝纫机台板上放置工具及其他与缝纫无关的物品。When machine runs, don’t put tools or other things on the table.

➢ 维护、检查、修理 Maintenance, inspection, repair

1. 维护、检查、修理的作业应由受过特别训练的人并在充分理解使用说明书的内容之后，再进行作业。Maintenance , inspection, repair should be operate by trained person who read& understand this manual book.
2. 对于缝纫机的日常检查或定期检查，应按照使用说明书的指示，切实认真的进行。The daily maintenance& inspection should be done according to the manual book.
3. 缝纫机的修理或部件的更换请使用本公司的原装部件。对于不恰当的修理、调整或使用假冒伪劣部件所造成的事故，本公司将不负一切责任。When need to change or repair spare parts, please use the original one from our company, if accidence happen by wrong operation or fake parts, our company will not take the responsibility.
4. 请不要根据顾客自己的判断对缝纫机进行改造。否则因改造而发生事故，本公司将不负一切责任。Please don’t change machine according to your own way. If accidence happen by this, our company will not take the responsibility.
5. 临时因修理、调整而拆卸下的安全装置、安全护罩，待作业完成后务必按原来的状态安装好。If take off the security equipments to repair or adjust machines, please fix all security equipments after finish.
6. 维护、检查、修理的作业完成后，请检查接通电源之后是否确实没有危险。After maintenance, inspection or repair, please power on then check security again.

4.安全保护装置 Security Equipments

➢ 护目镜 Eyes’ Guard

为了眼睛的安全，绝对不要在打开护目镜的状态下操作缝纫机。护目镜是为了在缝纫中断针时，阻挡断针飞入眼睛的安全装置。To protect eyes, please don’t operate sewing machines without eyes’ guard. Eyes’ guard is to protect broken needle hurt eyes.

➢ 压脚 Presser Foot

压脚抬起时有夹伤手指的危险，请不要把手指放在压脚下面。Presser foot may hurt finger when get up, please don’t put fingers under presser foot.

5. 日常操作中了解的常识问题 General Knowledge of Operations

➢ 机器速度 Machine Speed

表 1 显示的是:机器的最大转速和标准转速。为了保证机器的寿命,请在开始使用的前 200 个小时(即一个月)使用最大转速的 75%，然后再用标准转速。

Refer to the table 1 below for maximum and standard speeds of the Series. To extend machine life, run the machine approximately 75% below the maximum speed for the first 200 hours of operation(approx.1 month).Then run the machine at the standard speed.

表 1

机器速度

机型	最大速度	标准速度
-0485UTC/AK/PL	3500	3200
-1264UTC/AK/PL	3500	3200
-1332・0864UTC/AK/PL	3500	3200

Table 1

MACHINE SPEED

Model	Maximum speed	Standard speed
-0485UTC/AK/PL	3500	3200
-1264UTC/AK/PL	3500	3200
-1332・0864UTC/AK/PL	3500	3200

➢ 台板加工图（图 1）Table drawing(picture 1)

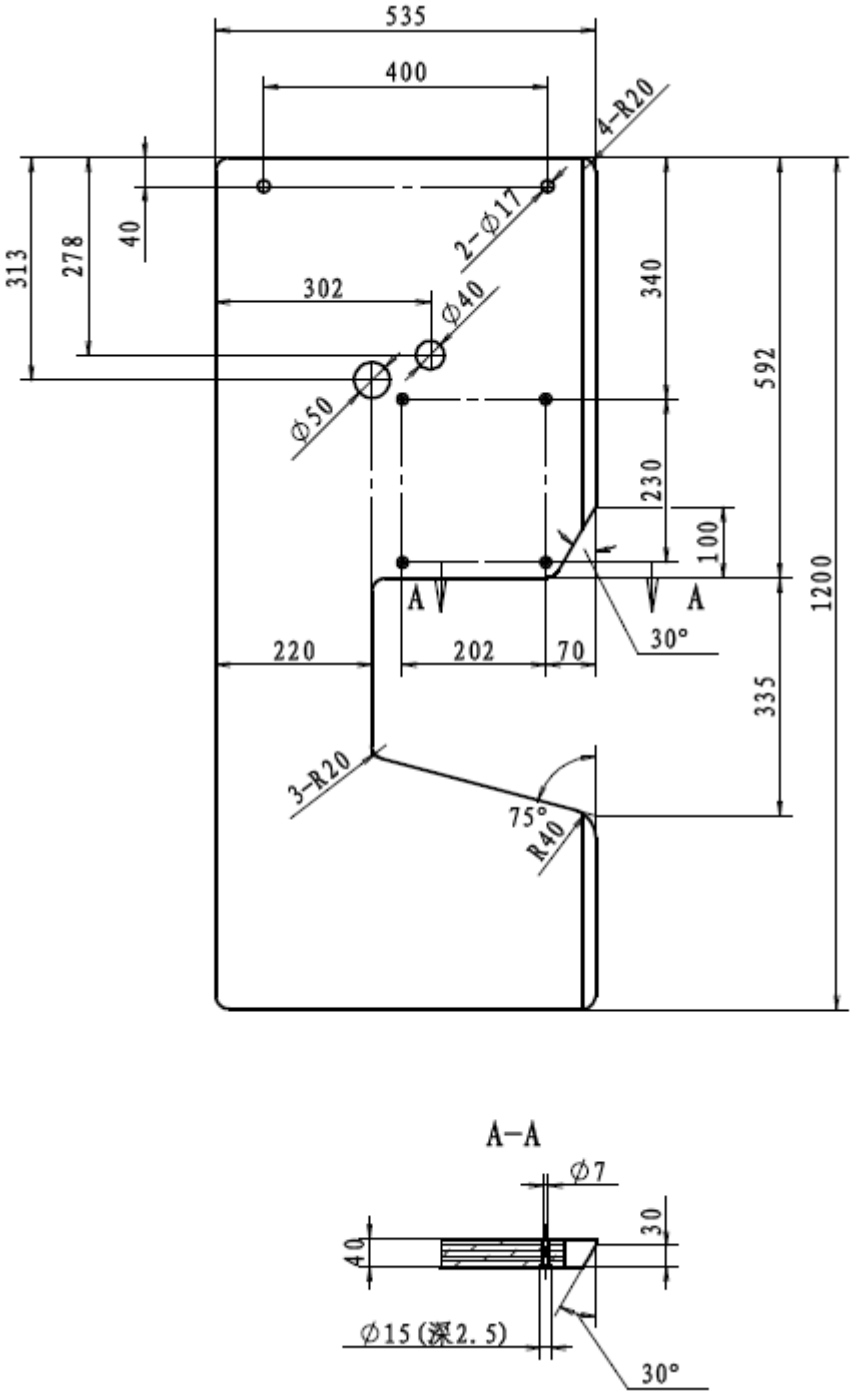

图 1

➢ 机器的安装 Machine Installation

依本机器所附台板图和零件组合图（图 2）所列之配件，依次安装防震机座。

Install the machine base according to the table& Part picture(picture2)

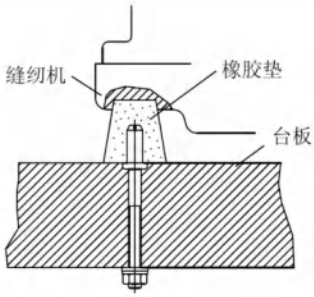

图 2

➢ 润滑油的注入与更换

Oil filling and changing.

1. 注入 Filling Oil

将 A（图 3）旋开，以包装箱内所附的超高速润滑油或选用 MOBIL#或 ESSO#32 等级的润滑油加入，油位在油窗 C（图 4）内的两油位线之间即可，然后再旋紧 A。

Open A(picture3), fill the oil(from attachment box) Or use MOBIL#or ESSO#32 oil, oil line should be between Two lines of window C(picture 4), then tighten A.

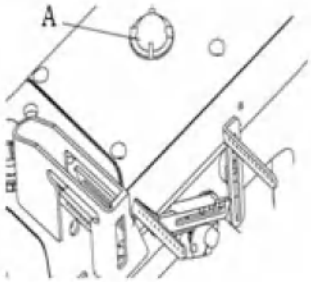

图 3

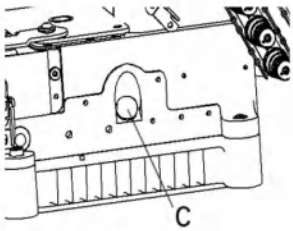

图 4

2. 更换润滑油 Changing oil

将螺钉 A（图 5）松开，使油盘内油完全排出后再锁紧。为延长本机器寿命，请于开始使用四星期后更换新油。而后约每四个月更换一次。

Release screw A(picture 5), the oil will discharge out, then fasten screw A. To make the machine life longer, please change Oil after 4 weeks from the date of using, then change oil 4 months one time;

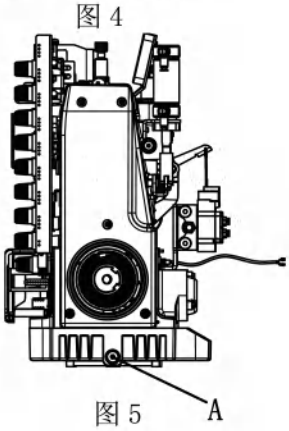

图 5

3. 更换滤油器 change oil filter

本机器装有滤油器 A（图 6），约每使用一个月后应卸下清洗，必要时更换新品。

This machine has oil filter A(picture 6), please clean the filter every month, and change the filter when neccesary.

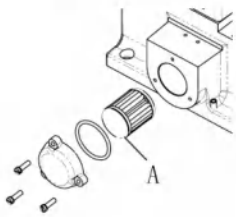

图 6

➢ 更换针 Change Needle

Table 1 (表 1)	
Needle System 针规格	Needle Size 针号
ORGAN UOX113GS	#11- #16 #75- #100

针的规格与尺寸选用请参照（表 1）。
The needle size and specificant please refer to Table.

1. 旋松螺钉 A（图 7）并取下针。
   Release screw A(picture 7), and take off the needle.
2. 将新针插入针夹的针孔至最底端，并使针的凹弧向左。
   Please insert the new needle to the bottom of needle clamp. And make the slot on left side.
3. 锁紧螺钉 A（图 7）。
   Fasten the screw A(picture 7).
4. 如果针安装不正确，不但会引起跳针断线还会损坏弯针，务必注意。
   If the needle installation is wrong,may happen needle breaking ,thread breaking or damage the looper,please be careful.

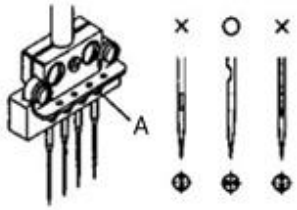

图 7

➢ 穿线方法 Threading Method

1. 请按照（图 8）（下页）给缝纫机穿线。穿线错误将引起断线，跳针或线迹不平坦等现象。
   please treading according (picture 8).
   Wrong threading will course thread breaking,stitch Jumping or stitch not smooth.
2. 在穿下弯针线时应将下弯针架拉杆 A（图 9）沿箭头方向拉出使下弯针架向前弹出，然后进行穿线。
   When threading lower looper please Pull out the looper bracket as (picture 9) then threading.

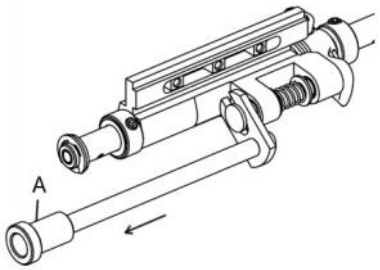

图 9

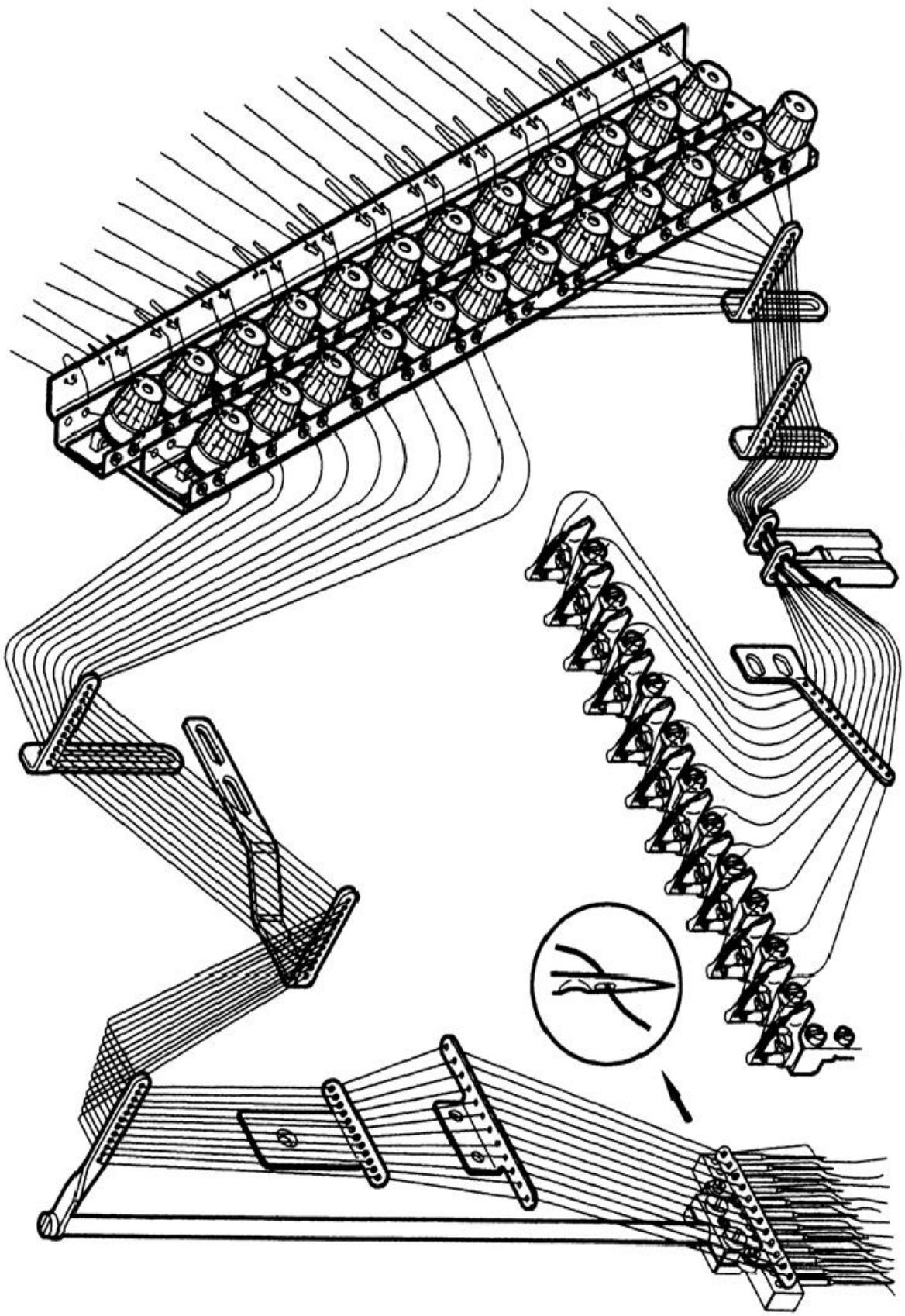

图8

➢ 缝线张力调整 Stitch Tension Adjusting

1. 缝线张力的强弱必须根据缝料层数、料质、线的种类与车缝的针距等不同而做不同的调整。压线螺母顺时针方向旋转时线越紧，反之则越松。
   Stitch tension need to adjust according to the thickness, material, thread and stitch length. Turn the presser nuts clockwise can fasten stitch; Turn the presser nuts counterclockwise can release stitch tension.
2. 针线导杆调整（图 10）Thread Guard Adjusting (picture10)
   针线导杆 B 依缝迹使用种类来选择使用状态，旋松螺钉 A 将 B 上下移动调整，在使用伸展性大的缝线时将 B 上移，反之下移。
   Raising the thread guard B increases the size of the needle thread Loop, Lowering the thread guard B decreases the size of the needle thread loop.

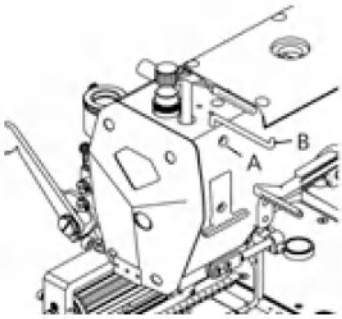

图 10

➢ 针距调整 Stitch Length Adjusting

首先确认马达已关掉。然后压下针距调节按钮 A（图 11），并转动手轮，会感觉“咔”一声，即按钮已卡入针距调节槽，继续转动手轮至所需针距。调长针距：将手轮往顺时针方向旋转针距加大，反之则小，最后放开按钮。针 距范围为 2～5mm。

Please power off first. Then Press stitch length adjusting button A(picture 11), then turn hand wheel, after hear & feel “KA” sound, the button has insert into stitch length adjusting slot, turn on the hand wheel to the lenth you need. Turn clockwise to enlarge stitch length; turn counterclockwise to reduce sitch length, then release button, stitch length can adjust from 2 to 5mm.

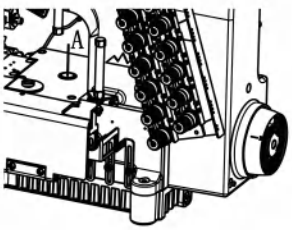

图 11

➢ 压脚压力调整 Preeser Foot Presure Adjusting

在缝料送料顺畅且线迹完美的情况下，压脚压力尽量轻些。松开螺母 A（图 12），转动螺钉 B，顺时针调整则压力加强，反之则减少。调整至适当的压力后再锁紧螺母 A。

As long as feeding smooth and stitch perfect, low down the presser foot presure. Release nut A(picture12), turn nut B,turn clockwise to enlarge foot pressure, turn counterclockwise to reduce presure. Adjust to a suitable tension then lock nut A.

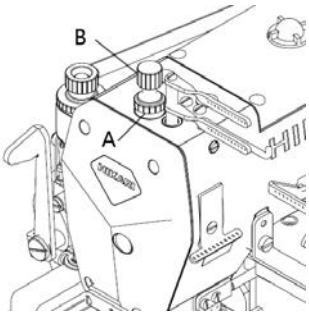

图 12

➢ 压脚调整 Presser Foot Adjusting

放下压脚，拧松螺钉 A（图 13）调整压脚，使针对准压脚孔中心，拧紧螺钉 A。拧松螺母 B，调整螺钉 C，保证螺钉 C 下平面与压脚板上平面的距离为 0.5mm。拧紧螺钉 B。

Lay down presser foot, release screw A (Picture 13) then adjust presser foot, make needle in the center of foot holes, then fasten screw A. release nut B, adjusting screw C, insure the distance as picture 13 (0.5mm),tighten nut B.

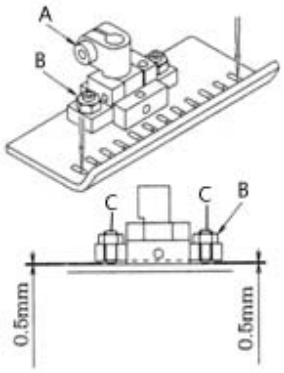

图 13

➢ 压脚高度调整 Presser Foot Height Adjusting

拧松螺母 D（图 14），调整螺钉 C 使抬压脚高度为 10mm。拧紧螺母 D。

Release nut D(picture 14), adjusting screw C to make the presser foot height 10mm. tighten nut D.

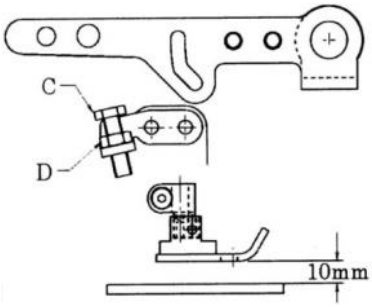

图 14

➢ 气路部分安装示意（图 15）Air Portion Installation Drawing(picture 15)

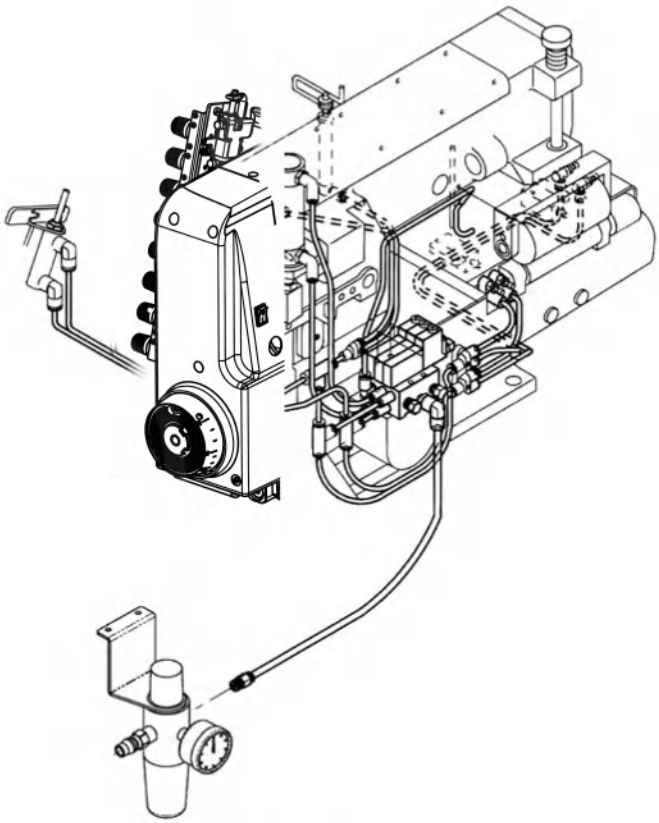

图 15

➢ 调整切线速度 Adjusting Cutting Speed

节流阀 A（图 16）是调节剪线刀切入时的速度。节流阀 B 是调节切线的速度。如果节流阀 A 调节过松，将导致切入速度过快和切入时位置不准确，造成切线错误。如果节流阀 B 调节过松会引起切线速度太快。导致线头过短。

Air valve A(picture 16) controls the speed of when the thread trimming knife holder protrudes. Air valve B controls the speed when the thread trimming knife holder retracts. If screw A is too loosened, the knife holder will protrude too fast and then the position of the knife holder will become unstable, causing cutting errors. If screw B is too loosened, the knife holder will retract too Fast and then the looper thread may not be held properly.

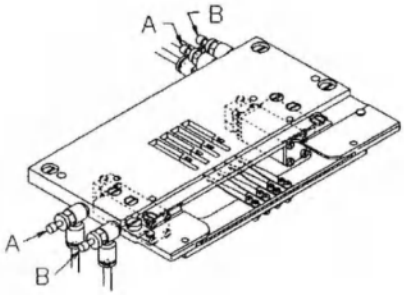

图 16

➢ 调整工作气压 Adjusting Air pressure

调节旋钮 A（图 17），使气压达到 4.5～5.5kg/cm^2，
气压过高将会损坏运动部件。
Turn Knob A（picture17）, make air pressure
4.5～5.5kg/cm^2 , to high pressure will damage
moving parts.

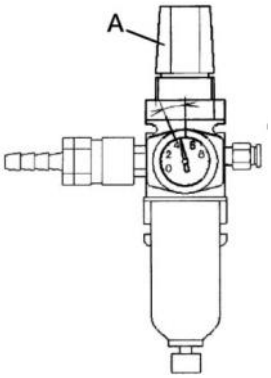

图 17

➢ 踏板控制器 Pedal Control Asm.

A：脚踏板向前踩，启动机器
Press foot pedal forward to start machine.
B：脚踏板在常态，针停在最高位置。
Foot pedal in normal position , needle stop on the top.
C：向后踩，针停在最高位置时开始剪线和
抬压脚。（图 18）
Foot pedal(picture18) backward position for
cutting and raising the presser foot.

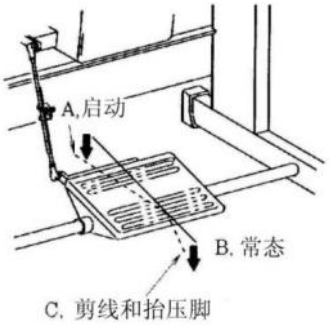

图 18

➢ 调整动刀 Adjusting The Movable Knife

拧松螺钉 B（图 19），调节动刀 A，使动刀刀
尖位于针孔中心左侧 0～0.5mm，然后螺钉拧紧 B。
Release screw B(picture 19), adjust the
movable knife A, make the movable knife
tip on the left of needle hole 0～0.5mm, then
tighten screw B

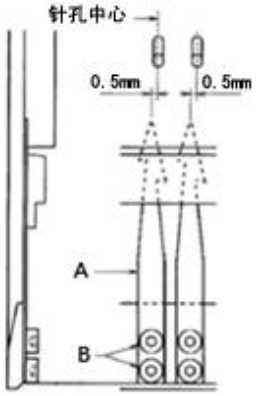

图 19

➢ 调整定刀 Adjusting The Stationary Knife

当动刀退到底时，使动刀刃过定刀刃 0.6mm。（图 20）
When the movable knife retracted fully, make the movable knife edge over the stationary knife edge 0.6mm(picture 20).

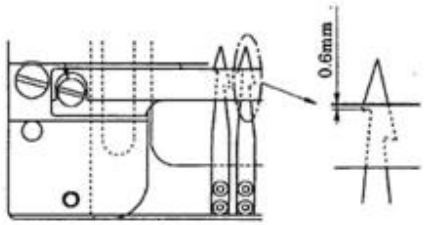

图 20

➢ 剪线过程示意图 Cutting Procedure Sketch Map

剪线时，动刀往回退。动刀刃口 A（图 21）勾住面线，动刀刃口 B 勾住底线移向定刀。然后底线压在动刀弹簧片和定刀之间。
To cut the needle and looper threads, the movable knife moves to the stationary knife with the needle thread hooked on cutting edge A(picture 21) and the looper thread hooked on cutting edge B while entering the needle thread loop.Then the looper thread is held by the stationary knife and the back spring.

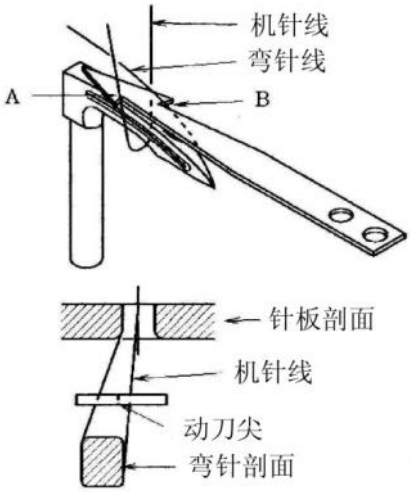

图 21

〈注意〉调整弹簧片使得在剪线后不压住面线。（图 22）
(cautions) adjust sping plate to make sure after cutting not press upper thread.(picture 22)

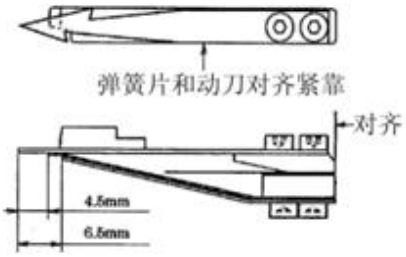

图 22

➢ 调整吹气口 Adjusting The Air Wiper

拧松螺钉 A（图 23），调节 C 对准机针孔，使出气口到最近一根针尖的距离为 10mm，拧紧螺钉 A。
Release screw A(picture23), adjust C to needle hole, make the distance between the air wiper and nearest needle 10mm, then tighten screw A.

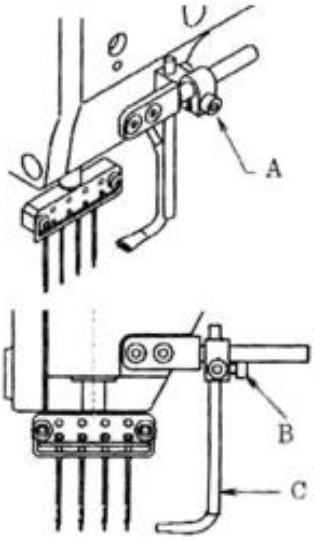

图 23

拧松螺钉 B，调节 C（图 24），使出气口中心到针孔中心的距离为 2～3mm，拧紧螺钉 B。
Release screw B,Adjust C(picture 24), make distance between air outlet and needle hole center 2 to 3mm, tighten screw B.

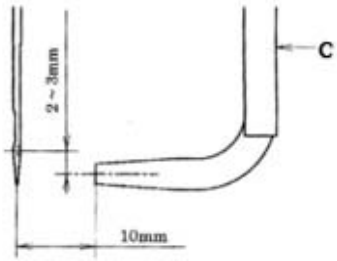

图 24

➢ 护针的安装与调试 Needle Guard Installation & Testing

拧松螺钉 B（图 25），调整护针 A 与机针的间隙为 0～0.1mm 然后锁紧螺钉 B。
Release screw B(picture25), adjust distance between needle Guard A and needle to 0 to 0.1mm then tighten screw B.

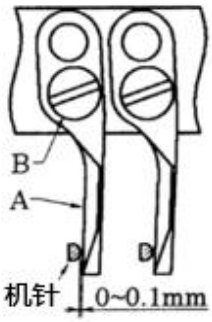

图 25

➢ 弯针的安装与调试 Looper Installation & Testing

将弯针 A（图 26）完全插入弯针座内，稍微锁紧螺钉 C，转动手轮，使机针上升，并使弯针柄中心线与机针的中心线重合。

Insert looper A(picture26) to looper base, tighten screw C , a little then turn hand wheel, lift needle, make looper holder centre line ahead to needle centre line.

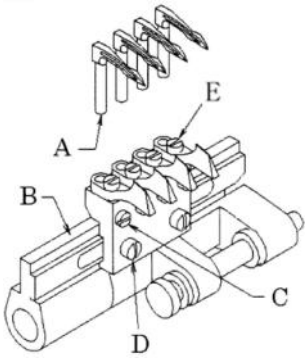

图 26

调整弯针尖使其与机针的间隙为 0～0.05mm（图 27），然后再锁紧螺钉 C。

Adjust looper tip to make distance between looper tip & needle 0-0.05mm(picture27), then tighten screw C.

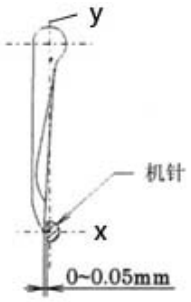

图 27

➢ 弯针退距调整 Looper Back Distance Adjusting.

当针在下死点时，拧松螺钉 B（图 28），调整弯针连杆 A 使弯针尖与机针中心线之间的距离为 2.8mm（图 29），拧紧螺钉 B。

When the needle bar is at the bottom of its stroke,loosen screw B(picture28),there should be a distance of 2.8mm(picture29) from the point of the looper to the centerof the needle bar. Then tighten screw B.

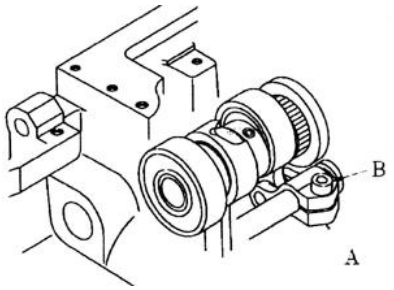

图 28

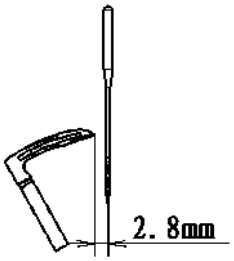

图 29

➢ 机针高度调整 Needle Height Adjusting

当针在最高点时，拆开面板上的油塞 A（图 30），
拧松螺钉 B，调节针杆，使针尖到针板上平面的
距离为 13.4mm，拧紧螺钉 B。
When needle on the top, open plug A(picture 30) on face plate, release screwB, adjust needle bar, make distance between neele tip and needle plate upper side 13.4mm.
Then tighten screw B.

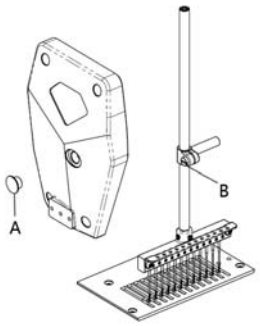

图 30

〈注意〉确保每根针都能插入针板针孔中心。
如（图 31）。
(caution) make sure every needle insert on needle plate hole centre.
Please refer to picture31.

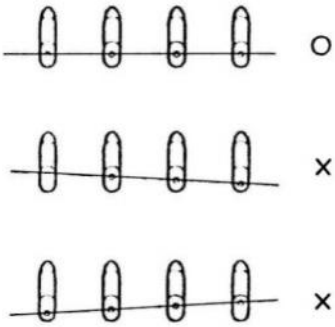

图 31

➢ 弯针调整 Looper Adjusting

弯针尖向右移至机针中心，如（图 32）所示位置时，弯针尖到针孔上边缘距离为 2mm。弯针尖向左移至机针中心时，弯针尖到针孔上边缘距离为 3.8mm。
需要调整时将偏心轮 A（图 33）的固定螺钉 B、C 放松，转动偏心轮 A，使得弯针与针的时位关系满足以上要求，然后拧紧螺钉 B、C。
The timming of the looper to the needle is as follows;When the piont of the looper,moving to the right,has reached the center of the needle, The piont of the looper should be 2mm above the top of the needle’ s hole. When the piont of the looper,moving to the left,has reached the center of the needle,The piont of the looper should be 3.8mm abovethe top of the needle’ s hole. Loosen screw B and C ,Then move eccentricA, made the timming of the looper to the needle as above.

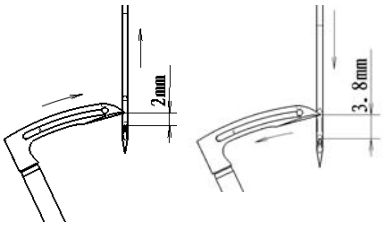

图 32

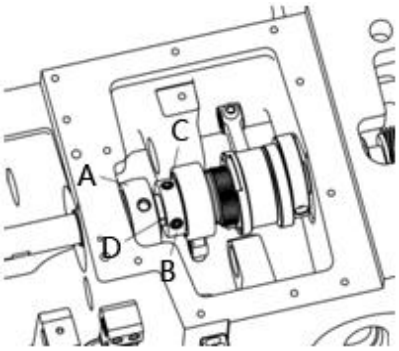

图 33

➢ 拨针的定位 Adjusting The Retainer Looper

拧松固定螺钉 B，调整拨针 A，使拨针 A 顶端与机针的间隙如（图 34）所示为 0.3～0.5mm，拧紧螺钉 B。
Release screw B,adjust the gap between the retainer looper A and needle(as picture 34) 0.3 to 0.5mm.tighten screw B.

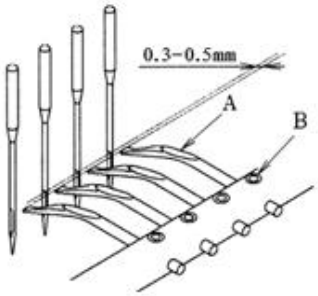

图 34

<注意>各拨线杆的位置如（图 35）中所示正确位置后再锁紧。
(caution) adjust wiper bar position as picture35 Then tighten.

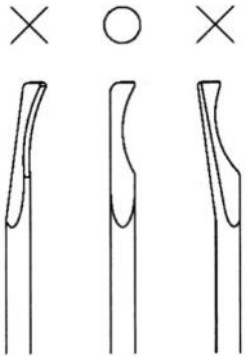

图 35

➢ 送料牙调整 Feed Dog Adjusting

送料牙升至上死点时，送料牙齿尖与针板面的距离为 0.8～1mm（图 36）。调整时将高度固定销 D（图 38）的螺钉 B 放松，使固定销顶到送料牙底部。再锁紧螺钉 B。此时亦应确认送料牙左右方向的平行。从 H（图 37）伸入螺丝刀，拧松螺钉 G，调整螺钉 F 使送料牙前后水平，锁紧螺钉 G。

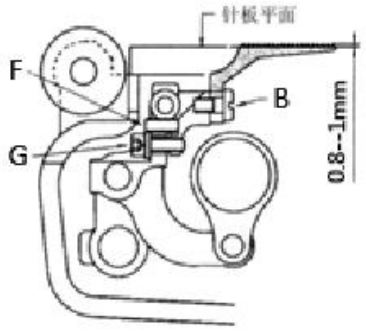

图 36

Feed dog lift to the top, feed dog tip 0.8-1mm higher than needle plate(picture 36). Relese screw B(picture38) to adjust height pin D. then tighten screwB. This time need to confirm that feed dog is parallel. Insert screw driver from H(picture37),release screw G,adjust screw F to make feed dog in the same level,tighten screw G.

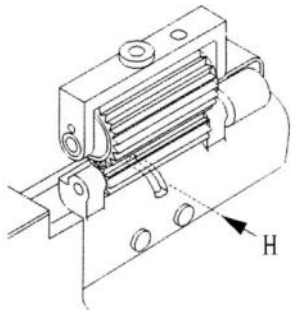

图 37

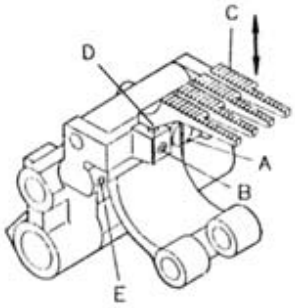

图 38

➢ 勾针与拨针的时位关系 Timming Of The Looper And The Retainer Looper

当机针位于最高点位置时，拨针应完全覆盖在弯针背上（图 39）。
勾针上端面与拨针下端面的间隙为 0～0.1mm。
When the needle bar on the highest position, the retainer looper cover on the back of the looper (as picture39),Looper upper side and the retainer looper lower side gap about 0～0.1mm.

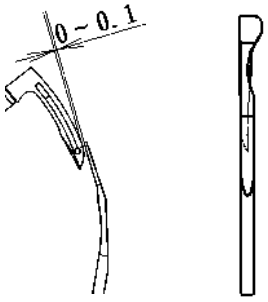

图 39

➢ 上下滚轮的调整 Upper& Lower Puller Adjusting.

放下上滚轮，拧松螺母 C（图 40），调整螺钉 B，
使上下滚轮的间隙为 0.5mm，拧紧螺母 C。
Put down upper puller wheel, release screw C(picture 40), adjust screwB,make the gap between upper&lower puller wheel 0.5mm, then tighten screw C.

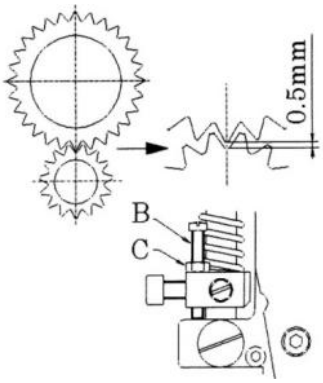

图 40

➢ 上滚轮压力的调整 Upper Puller Pressure Adjusting

将压力调节螺钉 D（图 41）往顺时针方向转动，
压力加大，反之则减小。
Turn screw D(picture 41) clockwise will increase the pressure,otherwise will reduce the pressure.

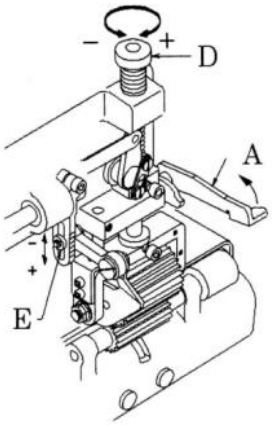

图 41

➢ 线的张力调节 Thread Tension Adjusting

线的张力要根据缝料，线的种类，针距的
长短来调节。旋钮 A（图 42）是调节面线
的，旋钮 B 是调节底线的。
Thread Tension need to adjust according to the thread and stitch_length. Button A(picture 42) for upper thread buttonB for bottom thread.

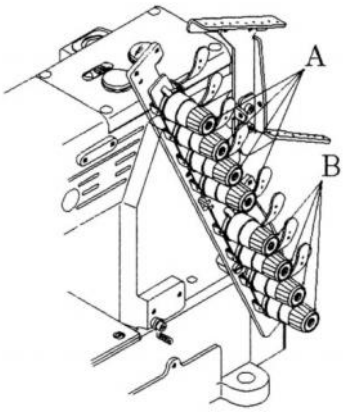

图 42

➢ 线量控制板位置调整

Thread Amount Control Board Position Adjusting.
过线孔（图 43）到螺钉中心约 40mm，距离增大使线迹变松。
Hole (picture 43) away from screw centre about 40mm. Increase distance can release stitch.

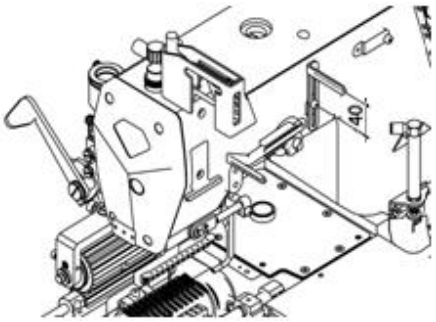

图 43

➢ 面线收紧调节 Upper Thread Tightening Adjusting

针杆在下死点时，拧松螺钉 C（图 44），调节挑线板 B，使挑线板 B 与针线导架 A 平行，然后锁紧螺钉 C。
When needle bar is in the bottom position, release screw C(picture44), adjust board B, make board B parallel with bracket A. then tighten screw C.

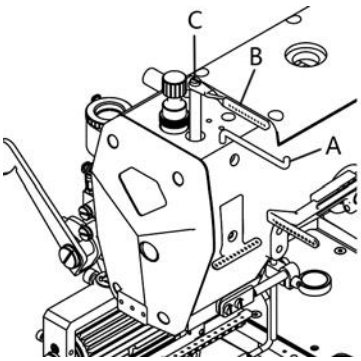

图 44

➢ 打线杆的时位关系 Timming Of The Wiper Bar

当机针往下到针板上平面以下 15mm 时，打线杆从下死点往上抬，紧线杆导线 A 往上抬线量加大，往下降线量减小。（图 45）
When needle move down to presser foot board upper side, wiper bar move from bottom position, move A upper increase thread length, Move A lower deduce thread length.

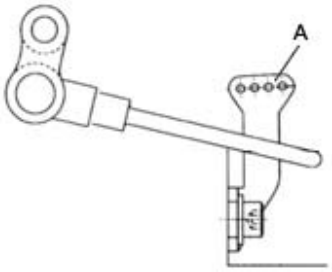

图 45

➢ **清洁机器** Cleaning

清扫机器时，拆掉压脚和针板，清扫针板、牙齿、弯针、护针等。(图 46)
When clean the machine, take off the presser foot and needle plate ,clean needle plate,gear,looper,needle guard.

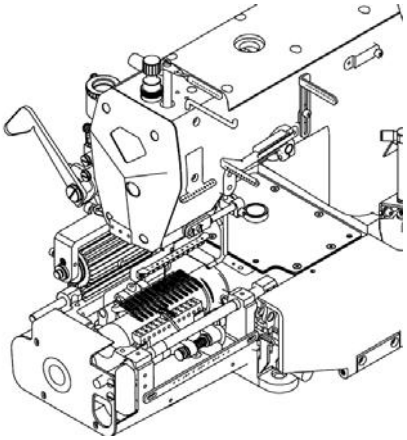

图 46

上海富山精密机械科技有限公司

Hikari(shanghai)precise Machinery Science&technology Co.,Ltd

中国上海市金山区朱泾工业园区中达路800号

NO.800.zhongda Road,jinshan Zone,shanghai,china

电话：（00）86-21-67311111

TEL：（00）86-21-67311111

传真：（00）86-21-67311311

Fax：（00）86-21-67311311

E-mail:hikari@chinahikari.com

http:www.chinahikari.com

此说明书仅作参考，如有更改恕不另作通知。

This manual is only for reference.

IF there is any modification , we apologize for the changing hence caused.

HIKARI®

专注高端 电脑包缝机的领导者

FOCUSING ON HIGH-END
COMPUTERIZED OVERLOCK MACHINE LEADER

HW800TC 系列 电脑直驱多针一体机

computerized direct drive multi-needle machine

零件手册

PARTS BOOK

CE

通过 ISO9001:2008
质量管理体系认证

目　　录

1. 机壳部件-1　FRAME ASSEMBLY-1……1

2. 机壳部件-2　FRAME ASSEMBLY-2……3

3. 过线部件　THREAD TENSION MECHANISM……5

4. 轴套部件　BUSHING…… 7

5. 下轴部件　CRANKSHAFT MECHANISM……9

6. 上轴部件　CRANKSHAFT MECHANISM…… 11

7. 针杆部件　NEEDLE BAR MECHANISM…… 13

8. 压料部件　PRESSER FOOT MECHANISM…… 15

9. 送料部件　FEED MECHANISM…… 17

10.下轴电机部件　MOTOR MECHANISM…… 19

11.弯针驱动部件　LOOPER MECHANISM…… 21

12.拖轮驱动部件　REAR PULLER MECHANISM……23

13.拖轮部件　REAR PULLER MECHANISM…… 25

14.针板部件　KNIFE MECHANISM…… 27

15.夹线器部件　THREAD TENSION MECHANISM……29

16.润滑部件　LUBRICATION MECHANISM…… 31

17.线架部件　THREAD STAND…… 33

18.气路部件　WIRING AND PIPING…… 35

19.四针夹线器部件　THREAD TENSION MECHANISM…… 37

20.附件　ACCESSORIES…… 39

21.不同规格零部件一览表　DIFFERENT PARTS LIST…… 41

01.机壳部件-1 FRAME ASSEMBLY-1

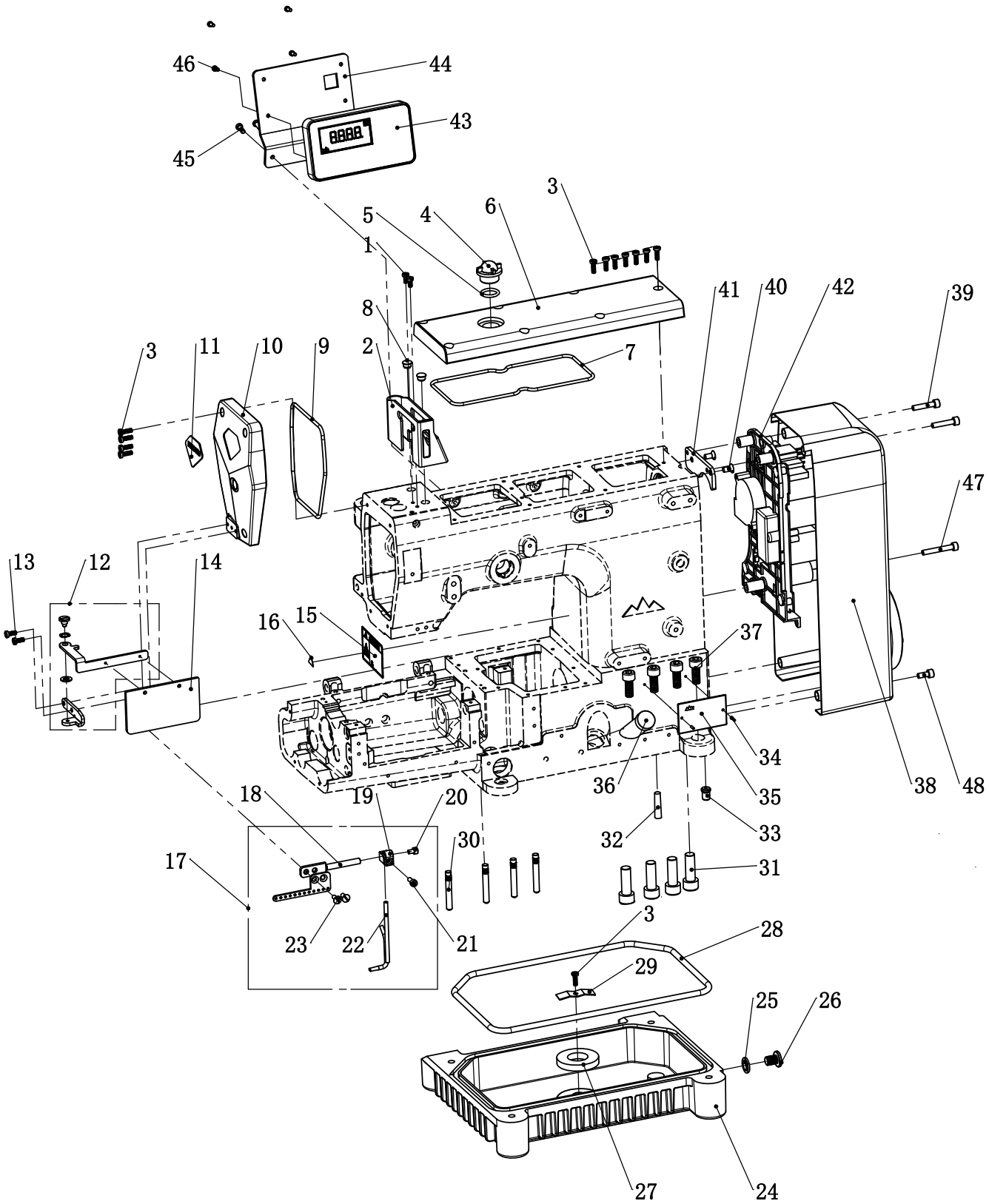

01.机壳部件-1　　FRAME ASSEMBLY-1

序 号	图　　号	名　　称	NAME OF PARTS	数量
1	01-504000821-1	开槽盘头螺钉　M4×8	SCREW	2
2	331.01-04	针杆护罩	NEEDLE BAR COVER	1
3	01-504001221-1	开槽盘头螺钉 M4×12	SCREW	12
4	101.09-01	视油窗	OIL SIGHT WINDOW	1
5	12-190265	O型圈19×2.65	O-RING	1
6	331.01-03	上盖	TOP COVER	1
7	331.01-02	上盖油封	GASKET	1
8	22-09403012	橡胶塞	PLUG	3
9	331.01-05	油封	GASKET	1
10	331.01-06	面板	HEAD COVER	1
11	H0-001	面板贴钻石形（紫色）	MARK	1
12	331.01-08	护目镜组件	EYE GUARD ASM.	1
13	01-504001021-1	开槽圆柱头螺钉　M4×10	SCREW	2
14	331.01-11	护目镜	EYE GUARD	1
15	101.01-13	安全标示B	SAFETY MARK B	1
16	201.02-10	安全标示A	SAFETY MARK A	1
17	331.01-14A	吹线组件	THREAD BLOW ASM.	1
18	331.01-14-01	吹线管定位杆	GUIDE	1
19	331.01-14-02	吹线管夹	BRACKET	1
20	01-504000624-1	内六角圆柱头螺钉 M4×6	SCREW	1
21	01-504001024-1	内六角圆柱头螺钉 M4×10	SCREW	1
22	331.01-14-03	吹线管	PIPE	1
23	01-104001021-1	开槽沉头螺I M4×10	SCREW	2
24	331.01-21	油盘	OIL RESERVOIR	1
25	201.15-01-02	放油螺钉油封	O-RING	1
26	201.15-01-03	放油螺钉 SM3/8"×28	SCREW	1
27	331.01-20	磁铁	MAGNET	1
28	331.01-19	油盘油封	GASKET	1
29	331.01-18	磁铁压板	MAGNET FIX PLATE	1
30	331.01-15	机壳支柱	SUPPORTING BAR	4
31	01-510003024-1	内六角圆柱头螺钉 M10×30	SCREW	4
32	16-3060301-5	圆锥销6×30	PIN	1
33	351.01-01-03	定位销	PIN	1
34	17-3200500-5	标牌铆钉	RIVET	2
35	H0-004	综合型号牌（紫色）	TYPE PLATE	1
36	331.01-16	油位窗	OIL SCALE PLATE	1
37	01-508002024-1	内六角圆柱头螺钉 M8×20	SCREW	4
38	CB-35N-02	电控护罩	ELECTRIC CONTROL COVER	1
39	01-505003524-1	内六角圆柱头螺钉 M5X35	SCREW	5
40	01-205000821-1	一字槽半沉头螺钉 M5X8	SCREW	2
41	336.06-05	连接板HW800TC	CONNECTING PLATE	1
42	EB-34N-00	电控主板	ELECTRIC CONTROL PLATE	1
43	CB-35-D-00	面板组件	FACE PLATE ASM.	1
44	CP35-02-01	操作面板支架	PLATE	1
45	01-404001023-1	螺钉	SCREW	2
46	01-503000821-1	螺钉	SCREW	4

2.机壳部件-2　　FRAME ASSEMBLY-2

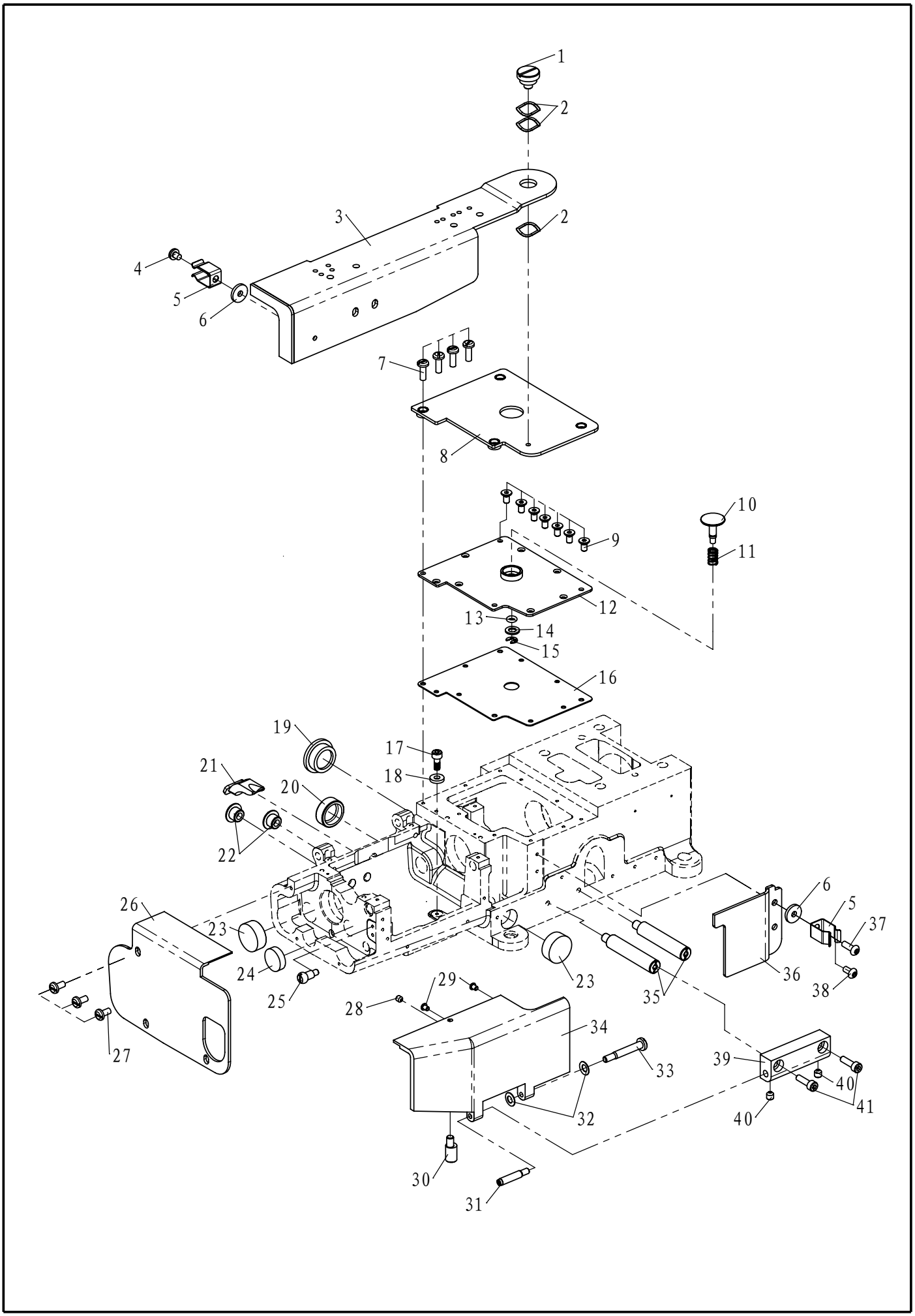

2.机壳部件-2　　FRAME ASSEMBLY-2

序号	图　　号	名　　称	NAME OF PARTS	数量
1	331.02-03	下轴外盖轴位螺钉	SCREW	1
2	08-1300317-1	波型挡圈13	SCREW	3
3	331.02-04A	前盖板	FRONT PLATE COVER	1
4	01-504000724-1	内六角槽圆柱头螺钉M4×7	SCREW	1
5	351.03-15	固定卡簧	SPRING	2
6	05-043201350-1	平垫圈	WASHER	2
7	01-504001221-1	开槽盘头螺I M4×12	SCREW	4
8	331.02-06	上盖板	UPPER COVER	1
9	01-104000824-1	内六角沉头螺钉 M4×8	SCREW	7
10	331.02-07-01	调针距按钮	PUSH BOTTON	1
11	331.02-07-02	针距调节按钮复位簧	SPRING	1
12	331.02-07-03	调针距安装板	COVER	1
13	12-038180	O型圈3.8×1.8	O-RING	1
14	05-056101000-4	平垫圈	WASHER	1
15	06-0350608-1	E型挡圈3.5	E-RING	1
16	331.02-08	调针距安装板垫	GASKET	1
17	01-504001024-1	内六角圆柱头螺钉 M4×10	SCREW	1
18	05-043200900-1	垫片	WASHER	1
19	22-20809024	橡胶塞	PLUG	1
20	22-20007000	橡胶塞	PLUG	1
21	331.02-09A	异型孔塞	PLUG	1
22	22-09403012	橡胶塞	PLUG	2
23	22-22008000	橡胶塞	PLUG	2
24	22-17405000	橡胶塞	PLUG	1
25	331.02-10	锁簧球螺钉	SCREW	1
26	331.02-11	底板左端罩	FRONT COVER	1
27	01-504000821-1	开槽盘头螺I M4×8	SCREW	3
28	01-804000414-1	内六角凹端紧定螺钉 M4×4	SCREW	1
29	331.02-12	橡胶缓冲垫	CUSHION RUBBER	2
30	331.02-13	前盖销	PIN	1
31	331.02-14A	铰链左螺钉销	PIN	1
32	09-0520309-1	碟形弹簧	SPRING	2
33	331.02-15	铰链右螺钉销	PIN	1
34	331.02-16	前盖体	FRONT COVER	1
35	331.02-17	前盖长轴螺钉	SCREW	2
36	331.02-18	挡片	OIL FENCE	1
37	01-504001221-1	一字槽圆柱头螺钉M4×12	SCREW	1
38	01-304000824-1	内六角平圆头螺钉 M4×8	SCREW	1
39	331.02-19	铰链	HINGE	1
40	01-805000514-1	内六角凹端紧定螺钉 M5×5	SCREW	2
41	01-504001424-1	内六角圆柱头螺钉 M4×14	SCREW	2

03.过线部件　　THREAD TENSION MECHANISM

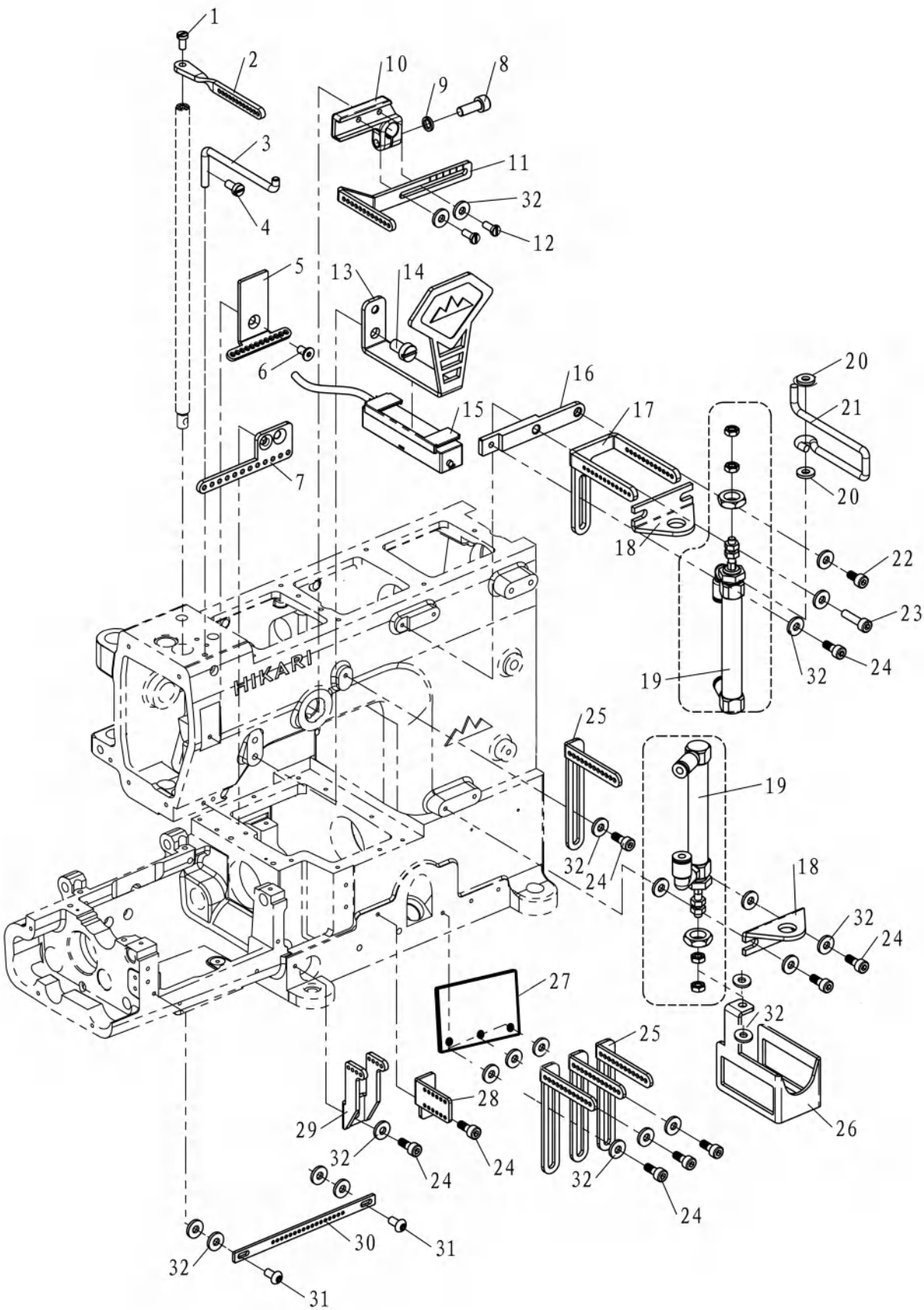

03.过线部件 THREAD TENSION MECHANISM

序号	图　号	名　称	NAME OF PARTS	数量
1	02-509401021-1	一字槽圆柱头螺钉SM9/64"×40×10	SCREW	1
2	331.03-01	针杆导线	THREAD GUIDE	1
3	331.03-18	针线导架	THREAD GUIDE	1
4	01-504000821-1	开槽圆柱头螺　M4×8	SCREW	1
5	331.03-02	导线	THREAD GUIDE	1
6	01-104000824-1	内六角沉头螺钉 M4×8	SCREW	1
7	331.03-03	针杆下导线	THREAD GUIDE	1
8	01-505001424-1	内六角圆柱头螺钉 M5×14	SCREW	1
9	07-0521313-1	弹簧垫圈5	SPRING WASHER	1
10	331.03-04	挑线杆座	BRACKET	1
11	331.03-05	挑线杆	THREAD GUIDE	1
12	01-535000821-1	开槽圆柱头螺钉 M3.5×8	SCREW	2
13	331.03-06	挑线护板	COVER	1
14	01-506001021-1	开槽圆柱头螺钉　M6×10	SCREW	1
15	JL-35 (N)	照明灯组件	LIGHT SAM.	1
16	331.03-08	过线夹板	BRACKET	1
17	331.03-09	过线架	THREAD GUIDE	1
18	331.03-17	输线气缸架	BRACKET	2
19	331.03-10A	松线气缸	AIR CYLINDER ASM.	2
20	05-043101203-5	平垫片4.3×1.0×12	WASHER	2
21	331.03-11	缓线钩	BAR	1
22	01-504000824-1	内六角圆柱头螺钉 M4×8	SCREW	1
23	01-504001424-1	内六角槽圆柱头螺钉M4×14	SCREW	1
24	01-504001024-1	内六角圆柱头螺钉 M4×10	SCREW	9
25	331.03-12	过线臂	THREAD GUIDE	4
26	331.03-13	下松线压板	PLATE	1
27	05-043201350-1	平垫片	WASHER	3
28	331.03-14	导线板	THREAD GUIDE	1
29	331.03-15	紧线杆导线	THREAD GUIDE	1
30	331.03-16	弯针导线	THREAD GUIDE	1
31	01-304000824-1	内六角平圆头螺钉 M4×8	SCREW	2
32	05-043080900-3	平垫片4.3×0.8×9	WASHER	21

04.轴套部件　　BUSHING

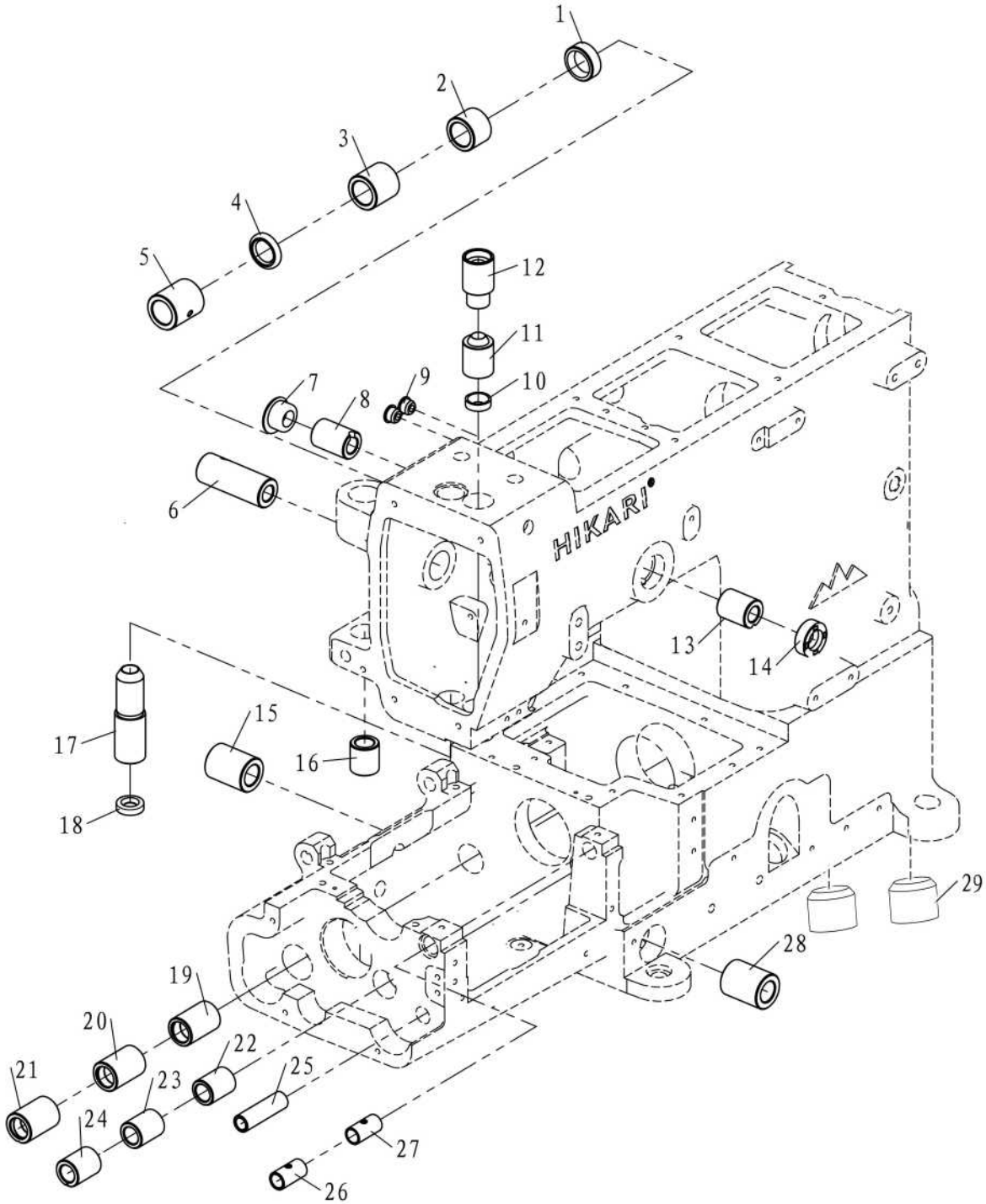

04.轴套部件 BUSHING

序号	图　号	名　称	NAME OF PARTS	数量
1	22-20007000	橡胶塞	PLUG	1
2	331.04-01	上滚轮驱动轴套(右)	BUSHING	1
3	331.04-02	上滚轮驱动轴套（中）	BUSHING	1
4	13-13030206	骨架油封	GASKET	1
5	331.04-03	上滚轮驱动轴套(左)	BUSHING	1
6	331.04-04	吊臂轴套	BUSHING	1
7	22-16506019	橡胶塞	PLUG	1
8	331.04-05	针线挑线杆轴套(后)	BUSHING	1
9	22-08506011	橡胶塞	PLUG	2
10	13-07040140A	骨架油封	GASKET	1
11	331.04-06	针杆下套	BUSHING	1
12	331.04-07A	针杆上套	BUSHING	1
13	331.04-08	针线挑线杆轴套(前)	BUSHING	1
14	13-08270200	骨架油封	GASKET	1
15	331.04-11	拨线曲柄轴套(后)	BUSHING	1
16	331.04-12A	滚轮轴套	BUSHING	1
17	331.04-13	压脚轴套	BUSHING	1
18	13-08240150	骨架油封	GASKET	1
19	331.04-10	送料轴套(右)	BUSHING	1
20	331.04-15	送料轴套（中）	BUSHING	1
21	331.04-14	送料轴套(左)	BUSHING	1
22	331.04-16	下弯针架轴套(右)	BUSHING	1
23	331.04-17	下弯针架轴套（中）	BUSHING	1
24	331.04-18	下弯针架轴套(左)	BUSHING	1
25	331.04-19	下弯针架拉杆轴套	BUSHING	1
26	331.04-20	拨线杆轴套(左)	BUSHING	1
27	331.04-21	拨线杆轴套(右)	BUSHING	1
28	331.04-22	拨线曲柄轴套(前)	BUSHING	1
29	22-19505500	橡胶塞	PLUG	2

5.下轴部件　　CRANKSHAFT MECHANISM

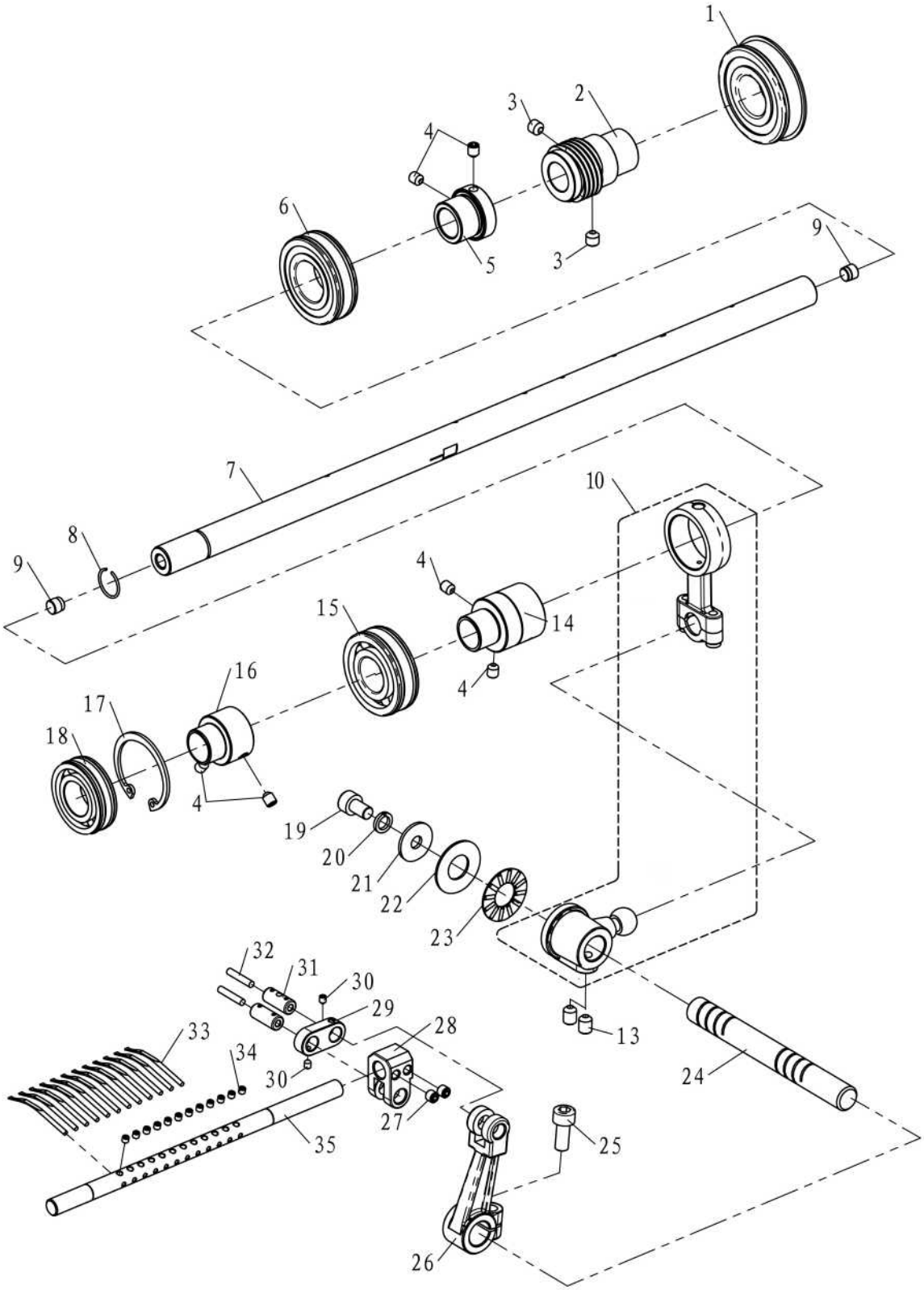

5.下轴部件 CRANKSHAFT MECHANISM

序号	图号	名称	NAME OF PARTS	数量
1	14-6204-2RSNR/2	轴承6204-2RS/2	BEARING	1
2	331.05-01	蜗杆	ENDLESS SCREW	1
3	01-806000614-1	内六角凹端紧定螺钉 M6×6	SCREW	2
4	01-805000614-6	内六角槽无帽凹端螺钉M5×6	SCREW	6
5	331.05-02	轴承内套（中）	BUSHING	1
6	14-6004-2Z/1	深沟球轴承6004-2Z/1	BEARING	1
7	331.05-03A	下轴	SHAFT	1
8	10-1251000-1	轴用钢丝挡圈14	C-RING	1
9	331.05-18	孔塞（06）	PLUG	2
10	331.05-05	拨线偏心连杆组	ECCENTRIC LINK ASM.	1
13	01-806000814-1	内六角凹端紧定螺钉 M6×8	SCREW	2
14	331.05-06	拨针偏心套	ECCENTRIC	1
15	14-6203-2Z/1	轴承6203-2Z/1	BEARING	1
16	331.05-07	轴承内套(左)	BUSHING	1
17	11-3781525-1	孔用弹性挡圈35	C-RING	1
18	14-6003-2Z/1	深沟球轴承6003-2Z/1	BEARING	1
19	01-506001024-1	内六角圆柱头螺钉 M6×10	SCREW	1
20	07-0631616-1	弹簧垫圈6	SPRING WASHER	1
21	05-064151902-5	平垫圈	WASHER	1
22	05-122102602-5	平垫圈	WASHER	1
23	14-AXK1226	推力轴承A×K1226	BEARING	1
24	331.05-09	拨线曲柄轴	SHAFT	1
25	01-506001424-1	内六角圆柱头螺钉 M6×14	SCREW	1
26	331.05-11	摆动臂	LEVER	1
27	01-805000514-1	内六角凹端紧定螺钉 M5×5	SCREW	2
28	331.05-12	拨线轴座	LEVER	1
29	331.05-17	拨线连杆	LEVER	1
30	01-803000444-1	内六角锥端紧定螺钉 M3×4	SCREW	2
31	331.05-10	拨杆销	PIN	2
32	331.05-15	油线	FELT	2
33	331.05-13	拨针	RETAINER LOOPER	12
34	01-803000314-1	内六角凹端紧定螺钉 M3×3	SCREW	12
35	331.05-14	拨线杆HW800TA-1264	RETAINER HOLDER	1
	332.05-14	拨线杆HW800T-0485	RETAINER HOLDER	1
	333.05-14	拨线杆HW800T-1332	RETAINER HOLDER	1
	334.05-14	拨线杆HW800T-2332	RETAINER HOLDER	1
	335.05-14	拨线杆HW800TA-0464	RETAINER HOLDER	1

6.上轴部件 CRANKSHAFT MECHANISM

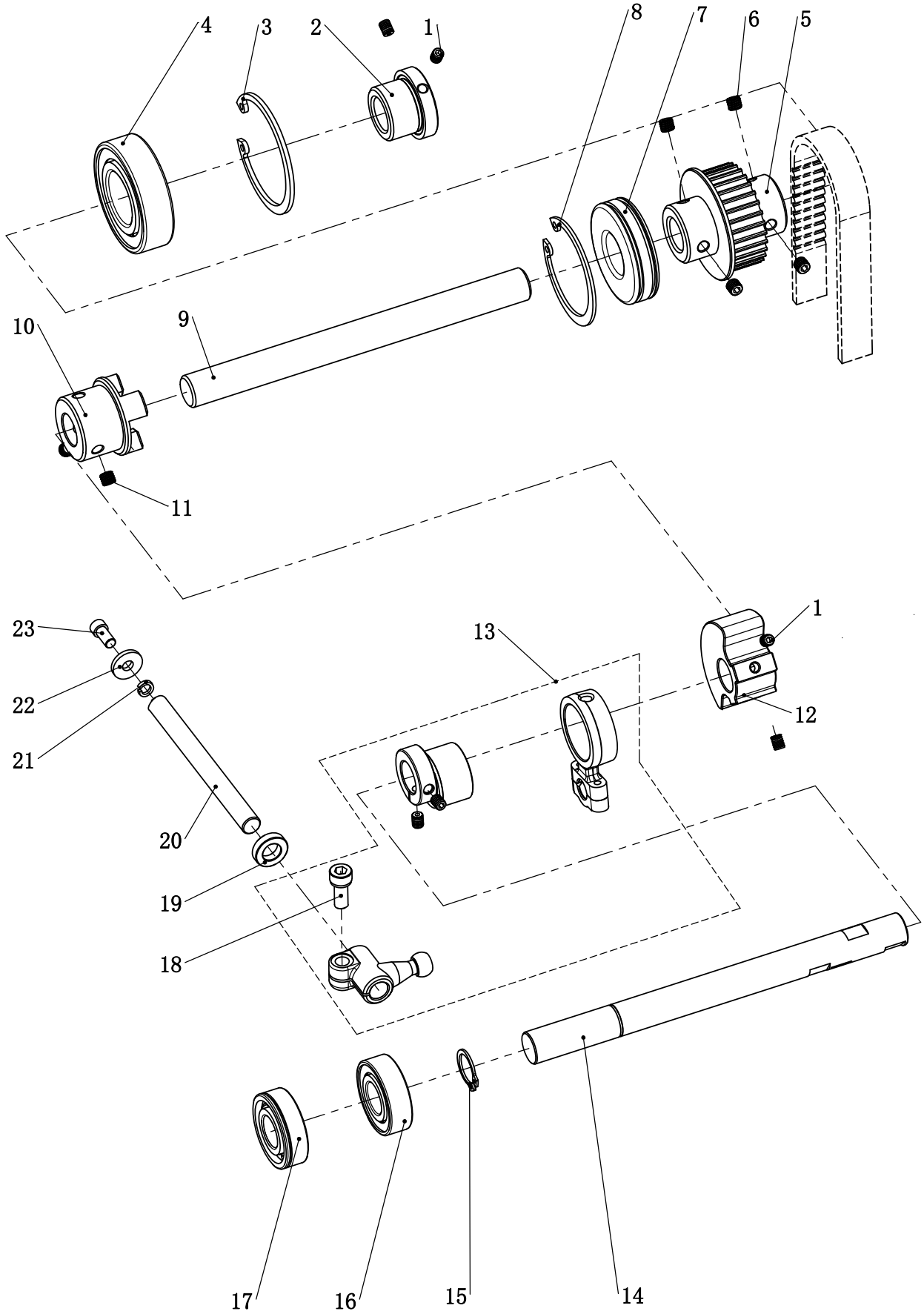

6.上轴部件 CRANKSHAFT MECHANISM

序号	图　　号	名　　称	NAME OF PARTS	数量
1	01-805000614-6	内六角槽无帽凹端螺钉M5×6	SCREW	4
2	336.06-02	轴承内套	BUSHING	1
3	11-5622030-1	孔用弹性挡圈52	C-RING	1
4	14-6205-2Z/1	深沟球轴承6205-2Z/1	BEARING	1
5	331.06-03	上轴同步带轮	SYNCHRONOUS BELT WHEEL	1
6	01-806750614-1	内六角凹端紧定螺钉M6×0.75×6	SCREW	4
7	14-6204-2RS/1	深沟球轴承6204-2RS/1	BEARING	1
8	11-5051530-1	孔用弹性挡圈47	C-RING	1
9	336.06-04	上轴(右)	SHAFT	1
10	336.10-04-03	连轴器	SHAFT JIONT	1
11	01-806000614-1	内六角凹端紧定螺钉 M6×6	SCREW	2
12	331.06-12	配重	BALANCING WEIGHT	1
13	331.06-06	上输线偏心连杆组件	ECCENTRIC LINK ASM.	1
14	331.06-11	上轴(左)	SHAFT	1
15	10-1381017-1	轴用挡圈15	C-RING	1
16	14-6202-2Z/1	深沟球轴承6202-2Z/1	BEARING	1
17	14-6202-2ZNR/2	轴承6202-2ZNR/2	BEARING	1
18	01-506001424-1	内六角圆柱头螺钉 M6×14	SCREW	1
19	331.06-09	衬套	BUSHING	1
20	331.06-08	传动轴	SHAFT	1
21	07-0521313-1	弹簧垫圈5	SPRING WASHER	1
22	05-053201452-5	平垫圈	WASHER	1
23	01-505001024-1	内六角圆柱头螺钉 M5×10	SCREW	1

7. 针杆部件　NEEDLE BAR MECHANISM

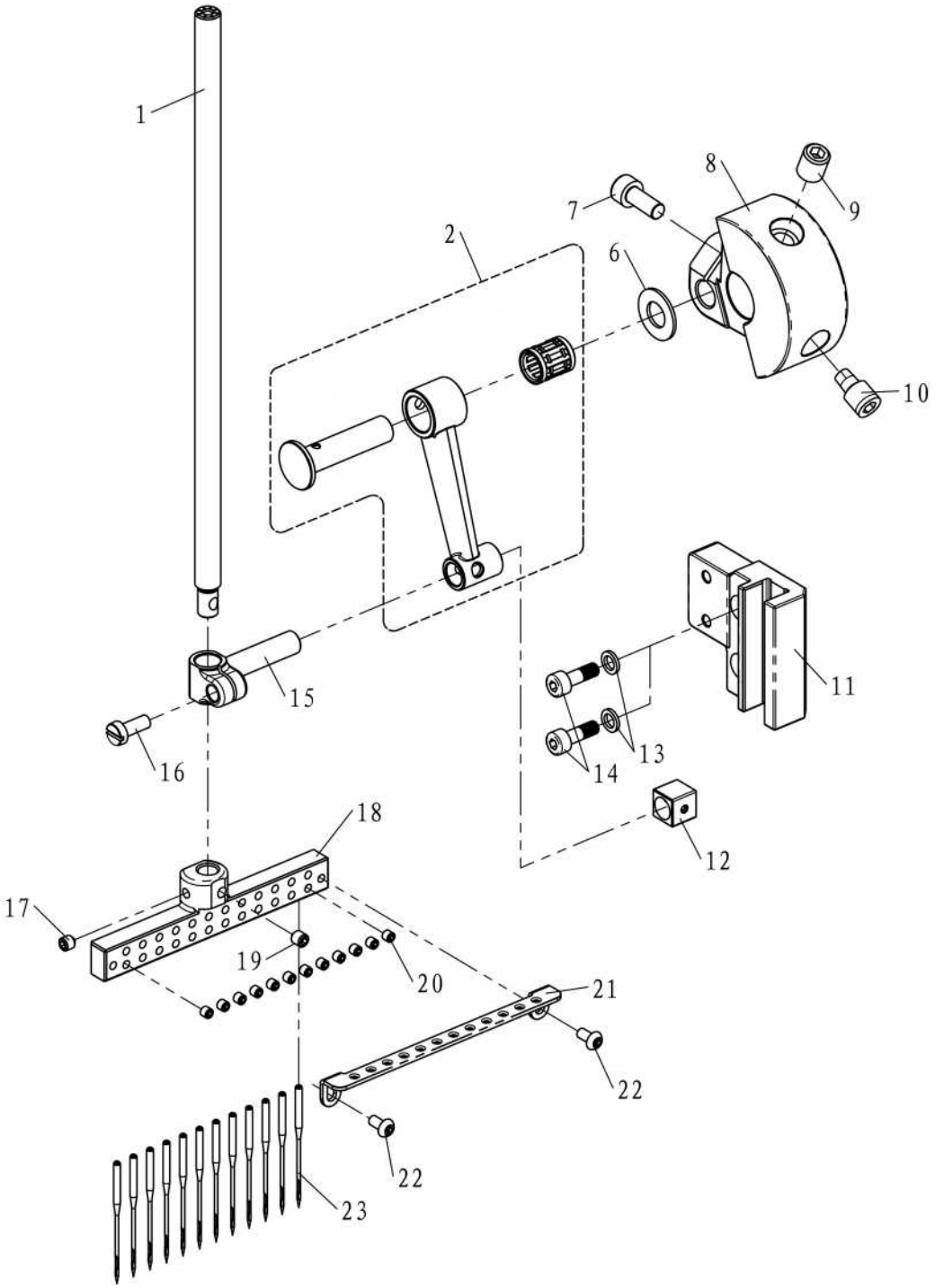

7.针杆部件 NEEDLE BAR MECHANISM

序号	图　　号	名　　称	NAME OF PARTS	数量
1	331.07-01	针杆	NEEDLE BAR	1
2	331.07-02	针杆连杆组	CONNECTING LINK ASM.	1
6	05-081101553-5	平垫片8.1×1.0×15.5	WASHER	1
7	01-505001424-1	内六角槽圆柱头螺钉M5×14	SCREW	1
8	331.07-04A	针杆曲柄	CRANK	1
9	01-808001014-1	内六角凹端紧定螺钉 M8×10	SCREW	1
10	01-808001434-1	针杆曲柄螺钉	SCREW	1
11	331.07-05	针杆导轨	NEEDLE BAR GUIDE	1
12	311.06-09	针杆连杆滑块HW762T	SLIDING BLOCK	1
13	05-043100700-1	平垫圈	WASHER	2
14	01-504001224-1	内六角圆柱头螺钉 M4×12	SCREW	2
15	331.07-07	针杆连接柱	LINK ROD	1
16	01-504001021-1	开槽圆柱头螺钉 M4×10	SCREW	1
17	01-804000414-1	内六角凹端紧定螺钉 M4×4	SCREW	1
18	331.07-08	针夹HW800TA-1264	NEEDLE CLAMP	1
	332.07-08	针夹HW800TA-0485	NEEDLE CLAMP	1
	333.07-08	针夹HW800T-1332	NEEDLE CLAMP	1
	334.07-08	针夹HW800T-2332	NEEDLE CLAMP	1
	335.07-08	针夹HW800TA-0464	NEEDLE CLAMP	1
19	01-804000544-1	内六角锥端紧定螺钉 M4×5	SCREW	1
20	01-803000324-1	内六角平端紧定螺钉 M3×3	SCREW	12
21	331.07-09	导线板HW800TA-1264	THREAD GUIDE	1
	332.07-09	针夹导线HW800T-0485	THREAD GUIDE	1
	333.07-09	针夹导线HW800T-1332	THREAD GUIDE	1
	335.07-09	针夹导线HW800TA-0464	THREAD GUIDE	1
22	01-303000521-2	开槽半圆头螺钉M3×5	SCREW	2
23	331.07-10	机针UO×113GS90/14	NEEDLE	12

8.压料部件　　PRESSER FOOT MECHNISM

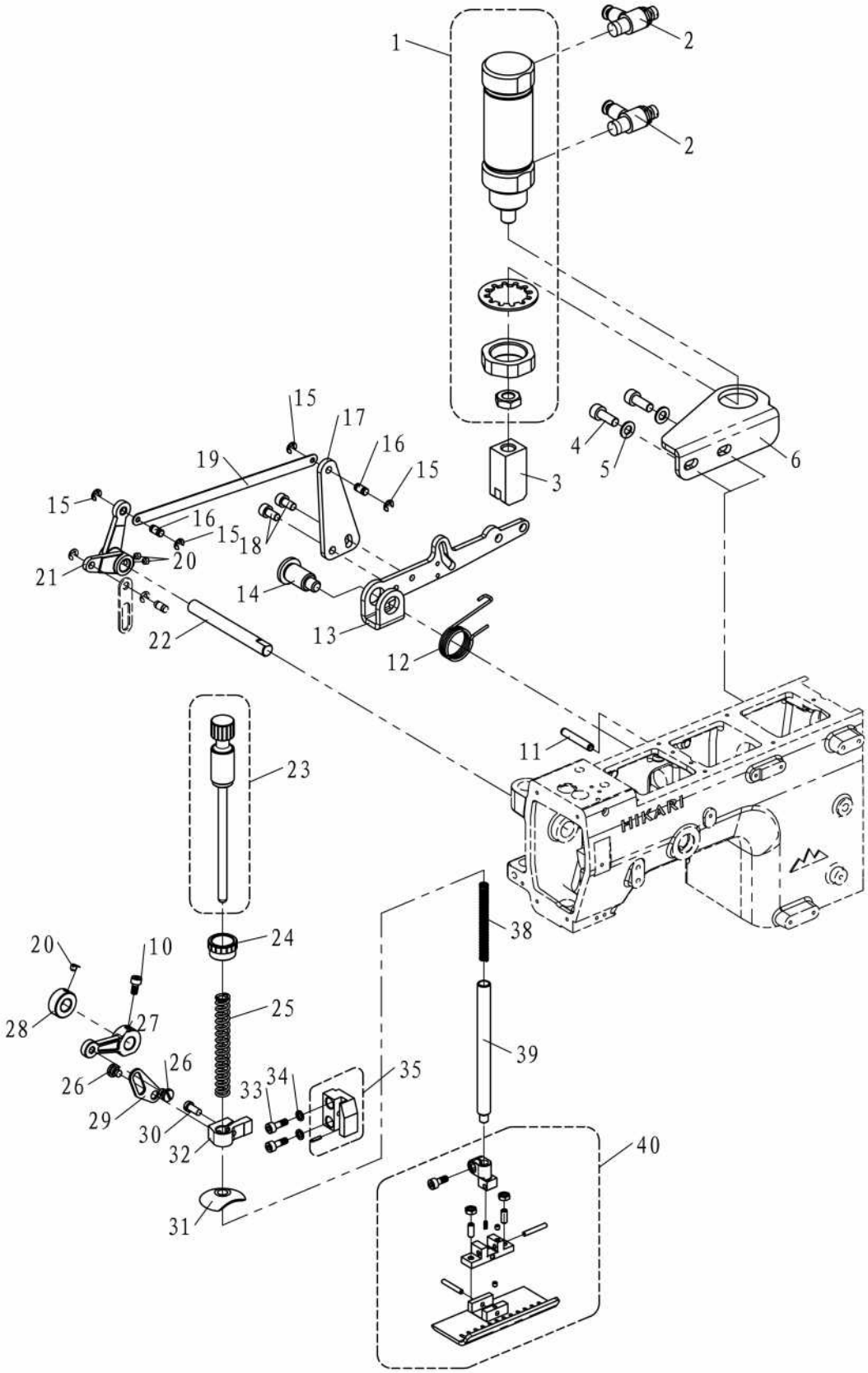

8.压料部件 PRESSER FOOT MECHNISM

序号	图　号	名　称	NAME OF PARTS	数量
1	71-CM2B32-25Z(SMC)	气缸组件	AIR CYLINDER ASM.	1
2	73-AS2201FG-01-04	速度控制阀（L型）R1/8'XΦ4	JOINT	2
3	331.08-02	抬压脚槽块	BRACKET	1
4	01-506001624-1	内六角圆柱头螺钉 M6×16	SCREW	2
5	05-063101201-1	平垫圈	WASHER	2
6	331.08-03	抬压脚气缸固定座	BRACKET	1
10	01-504000824-1	内六角圆柱头螺钉 M4×8	SCREW	1
11	15-1503005-1	弹性圆柱销5×30	PIN	1
12	331.08-05	抬压脚拉杆扭簧	SPRING	1
13	331.08-06	抬压脚拉杆	LEVER	1
14	331.08-07	抬压脚拉杆轴位螺钉	SCREW	1
15	06-0350608-1	E型挡圈3.5	E-RING	4
16	331.08-08	升降杆连接拉板销	PIN	2
17	331.08-09	上滚轮升降板	PLATE	1
18	01-505001024-1	内六角圆柱头螺钉 M5×10	SCREW	2
19	331.08-10	升降杆连接拉板	PLATE	1
20	01-804000414-1	内六角凹端紧定螺钉 M4×4	SCREW	3
21	331.08-11	吊臂	LEVER	1
22	331.08-12A	压脚销	PIN	1
23	331.08-13	调压螺钉组件	SCREW ASM.	1
24	331.08-14	调压螺母	NUT	1
25	331.08-15	压杆簧	SPRING	1
26	331.08-16	轴位螺钉 SM3/16"×32-2	SCREW	2
27	331.08-17A	抬压脚摆动杆	CONNECTING ROD	1
28	331.08-18	压脚销挡圈	WASHER	1
29	331.08-19	抬压脚吊板	PLATE	1
30	02-511401021-1	开槽圆柱头螺钉 SM11/64"×40-10	SCREW	1
31	331.08-20	封油片	GASKET	1
32	331.08-21	压杆滑块	SLIDING BLOCK	1
33	01-504001224-1	内六角圆柱头螺钉 M4×12	SCREW	2
34	05-043100700-1	平垫圈	WASHER	2
35	331.08-22	压杆滑槽组	SLIDING BLOCK ASM.	1
38	331.08-23	压杆细弹簧	SPRING	1
39	331.08-24	压杆	SHAFT	1
40	331.08-25	压脚组件HW800TA-1264	PRESSER FOOT ASM.	1
	332.08-25	压脚组件HW800TA-0485	PRESSER FOOT ASM.	1
	333.08-25	压脚组件HW800TA-1332	PRESSER FOOT ASM.	1
	334.08-25	压脚组件HW800TA-2332	PRESSER FOOT ASM.	1
	335.08-25	压脚组件HW800TA-0464	PRESSER FOOT ASM.	1

9.送料部件　　FEED MECHANISM

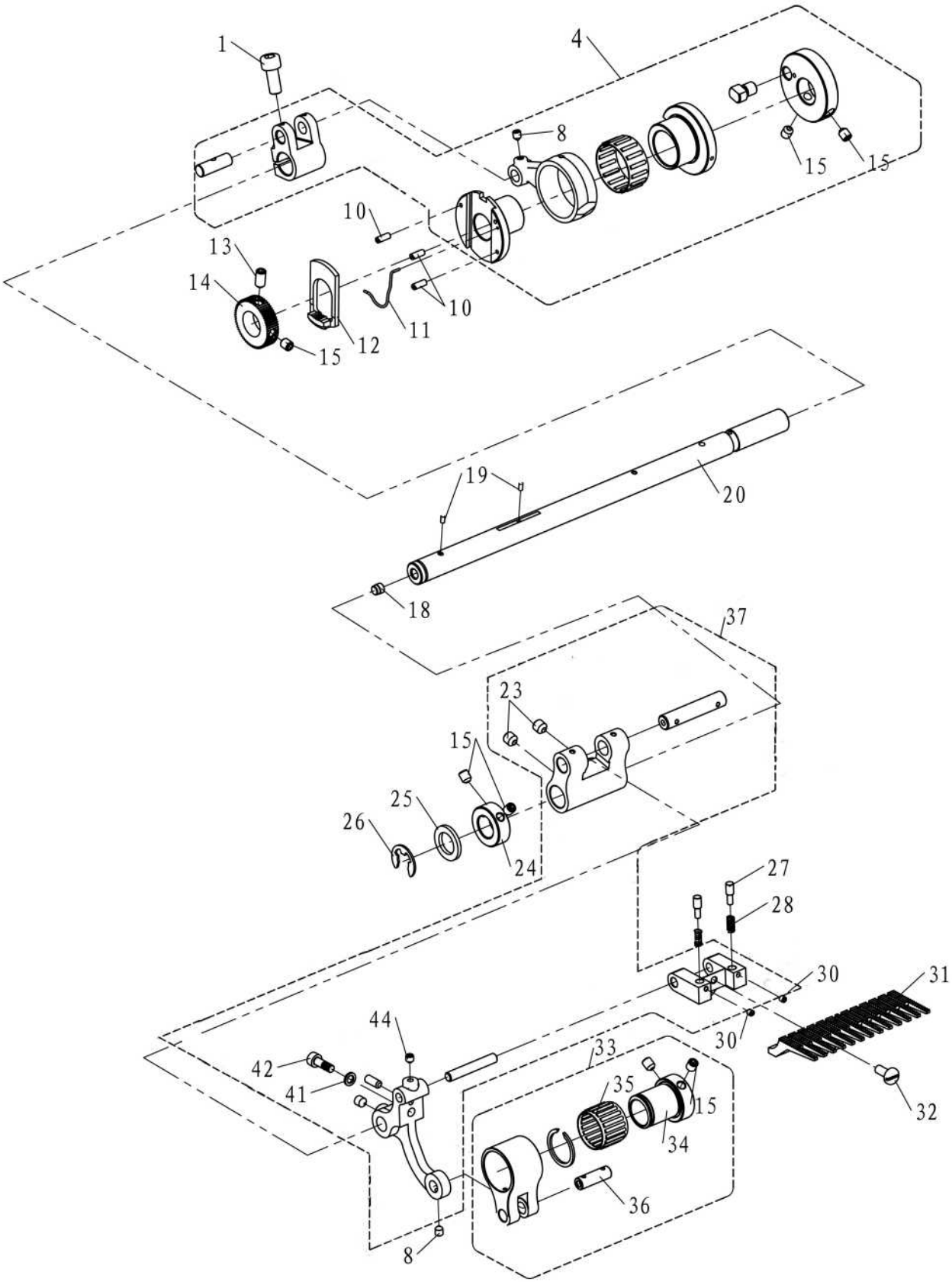

9.送料部件　　FEED MECHANISM

序号	图　　号	名　　称	NAME OF PARTS	数量
1	01-506001424-1	内六角圆柱头螺钉 M6×14	SCREW	1
4	331.09-03	针距调节组	STITCH LENGTH ADJUSTI	1
8	01-804000544-1	内六角锥端紧定螺钉 M4×5	SCREW	2
10	331.09-19	挡销螺钉 M3	SCREW	3
11	331.09-20	针距调节锁簧	SPRING	1
12	331.09-21	调节送料齿片	REGULATING GEAR	1
13	01-805001014-1	内六角凹端紧定螺钉 M5×10	SCREW	1
14	331.09-22	离合齿轮	REGULATING GEAR	1
15	01-805000614-6	内六角槽无帽凹端螺钉M5×6	SCREW	7
18	331.09-06	孔塞（05）	PLUG	1
19	351.09-04	油毯	FELT	2
20	331.09-07A	牙架轴	SHAFT	1
23	01-806000614-1	内六角凹端紧定螺钉 M6×6	SCREW	2
24	331.09-10	送料曲柄挡圈	COLLAR	1
25	05-121201903-5	平垫圈	WASHER	1
26	06-0901018-1	E型挡圈9	E-RING	1
27	331.09-11	抬牙销	PIN	2
28	331.09-12	抬牙销簧	SPRING	2
30	01-803000314-1	内六角凹端紧定螺钉 M3×3	SCREW	2
31	331.09-14	送料牙HW800TA-1264	FEED DOG	1
	332.09-14	送料牙HW800T-0485	FEED DOG	1
	333.09-14	送料牙HW800T-1332	FEED DOG	1
	334.09-14	送料牙HW800TA-2332	FEED DOG	1
	335.09-14	送料牙HW800TA-0464	FEED DOG	1
32	02-511401021-1	开槽盘头螺钉 SM11/64"×40-10	SCREW	1
33	331.09-15-00	抬牙偏心组件	ECCENTRIC CRANK ASM.	1
34	331.09-15	抬牙偏心套	ECCENTRIC	1
35	14-K182217	滚针 K18×22×17	BEARING	1
36	331.09-01	弯针连杆销	PIN	1
37	331.09-17-00	牙架座组件	FEED DOG HOLDER ASM.	1
41	05-043100700-1	平垫圈	WASHER	1
42	01-504001224-1	内六角圆柱头螺钉 M4×12	SCREW	1
44	01-804000414-1	内六角凹端紧定螺钉 M4×4	SCREW	1

10.连轴器、电机部件　　MOTOR MECHANISM

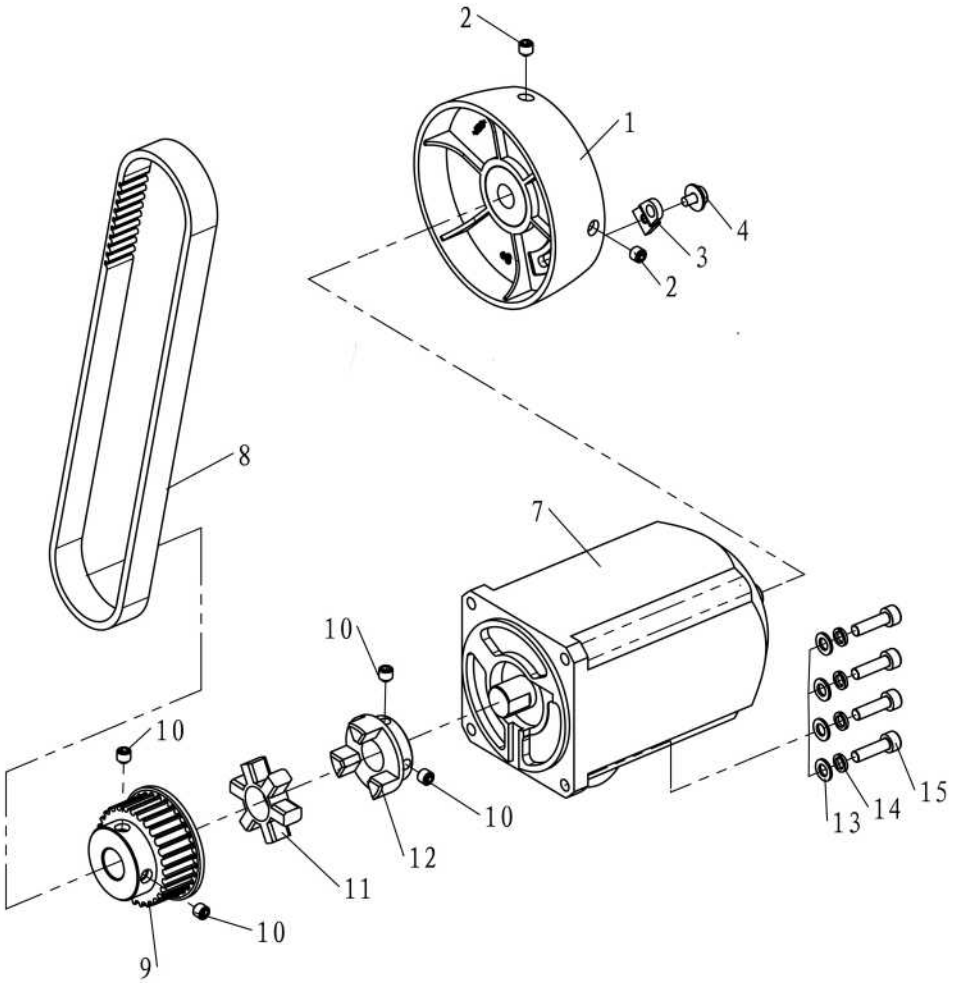

10.连轴器、电机部件 MOTOR MECHANISM

序号	图　　号	名　　称	NAME OF PARTS	数量
1	210.04-27G	手轮	HAND WHEEL	1
2	02-815281014-1	内六角凹端紧定螺钉SM15/64”×28	SCREW	2
3	103.13-107	磁钢座组件	MAGNETS	1
4	18-404000823-3	磁钢固定螺钉	SCREW	1
7	CB35-D-00	电机	MOTOR	1
8	331.10-03A	同步带	SYNCHRONOUS BELT	1
9	331.10-04-01	下轴同步带轮	SYNCHRONOUS BELT WHEEL	1
10	01-806750614-1	内六角凹端紧定螺钉 M6×0.75×6	SCREW	4
11	331.10-04-02	同步带轮缓冲垫	CUSHION	1
12	331.10-04-03	电机连轴器	COUPLING	1
13	05-053101000-1	平垫片	WASHER	4
14	07-0521313-1	弹簧垫圈5	SPRING WASHER	4
15	01-505001824-1	内六角圆柱头螺钉 M5×18	SCREW	4

11.弯针驱动部件　　LOOPER MECHANISM

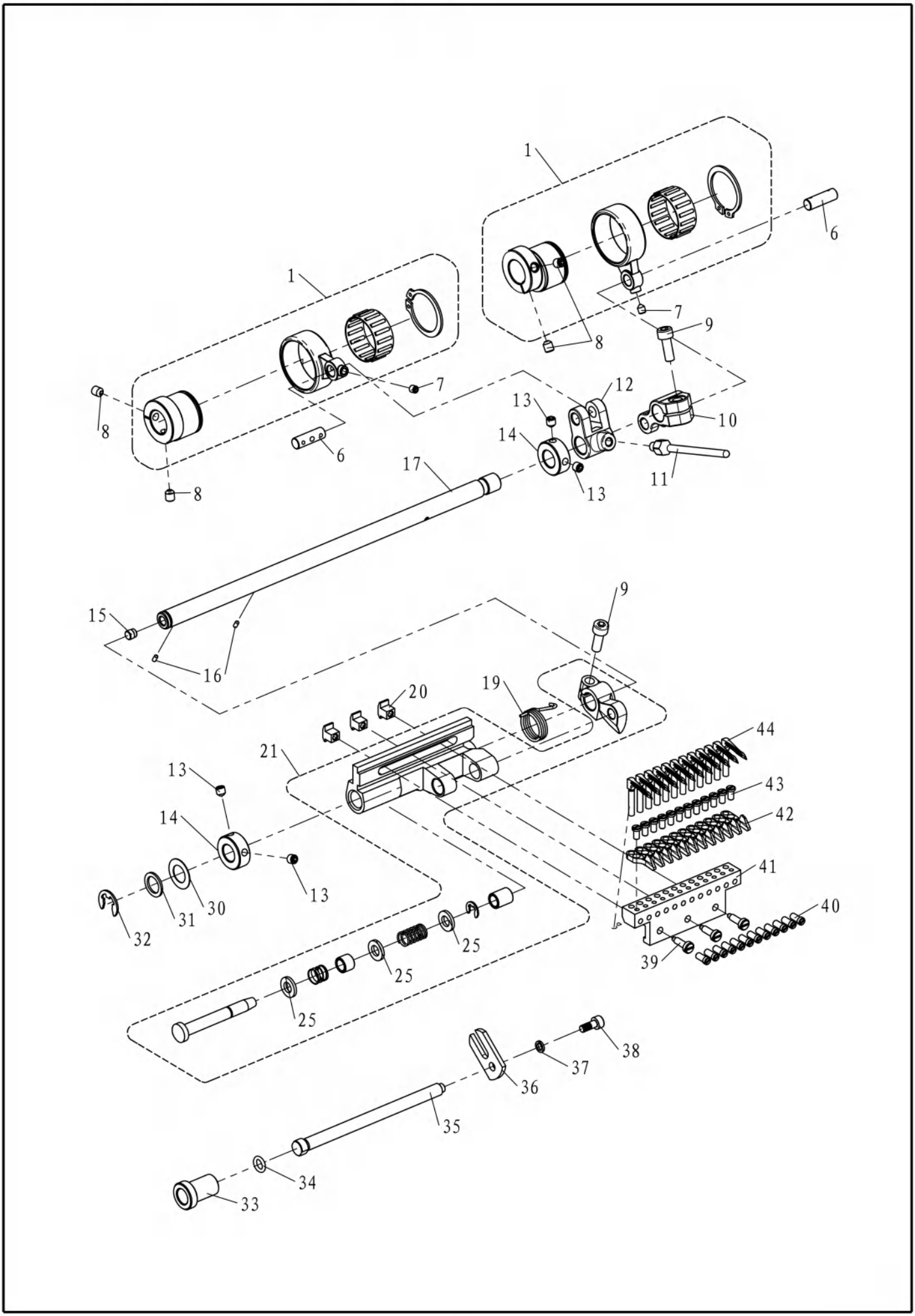

11.弯针驱动部件　　LOOPER MECHANISM

序号	图　　号	名　　称	NAME OF PARTS	数量
1	331.11-01	弯针偏心组	ECCENTRIC LINK ASM.	2
6	331.09-01	弯针连杆销	PIN	2
7	01-804000544-1	内六角锥端紧定螺钉 M4×5	SCREW	2
8	01-805000614-6	内六角槽无帽凹端螺钉M5×6	SCREW	4
9	01-505001424-1	内六角圆柱头螺钉 M5×14	SCREW	2
10	331.11-02A	弯针曲柄	CRANK	1
11	331.11-05	打线杆	TAKE-UP ROD	1
12	331.11-04	打线杆曲柄	CRANK	1
13	01-805000514-1	内六角凹端紧定螺钉 M5×5	SCREW	4
14	331.11-06	打线偏心挡圈	COLLAR	2
15	331.09-06	孔塞（05）	PLUG	1
16	351.09-04	油毯	FELT	2
17	331.11-07	弯针架轴	SHAFT	1
19	331.11-09	弯针架座扭簧	SPRING	1
20	331.11-10A	滑块	SLIDING BLOCK	3
21	331.11-11	弯针承座组	LOOPER ROCKER ASM.	1
25	05-064161200-1	平垫圈6	WASHER	3
30	331.11-20	平垫圈	WASHER	1
31	05-101111453-5	平垫圈	WASHER	1
32	06-0801016-1	E型挡圈8	E-RING	1
33	331.11-18	拉杆套	STUD	1
34	12-060180	O型圈6×1.8	O-RING	1
35	331.11-17	弯针架座拉杆	SHAFT	1
36	331.11-16	拉板	BRACKET	1
37	07-0421111-1	弹簧垫圈4	SPRING WASHER	1
38	01-504001024-1	内六角圆柱头螺钉 M4×10	SCREW	1
39	331.11-12	弯针座螺钉	SCREW	3
40	02-909400721-1	开槽小帽（0)4.5)螺钉SM9/64"×40-7	SCREW	12
41	331.11-13	弯针座HW800TA-1264	LOOPER HOLDER	1
	332.11-13	弯针座HW800T-0485	LOOPER HOLDER	1
	333.11-13	弯针座HW800T-1332	LOOPER HOLDER	1
	334.11-16	弯针组件HW800T-2332	LOOPER HOLDER	1
	335.11-13	弯针座HW800TA-0464	LOOPER HOLDER	1
42	331.11-14	护针	NEEDLE GUARD	12
43	02-608440621-1	开槽薄帽（1.5)螺钉SM1/8"×44-6	SCREW	12
44	331.11-15	弯针	LOOPER	12

12.拖轮驱动部件　　REAR PULLER MECHANISM

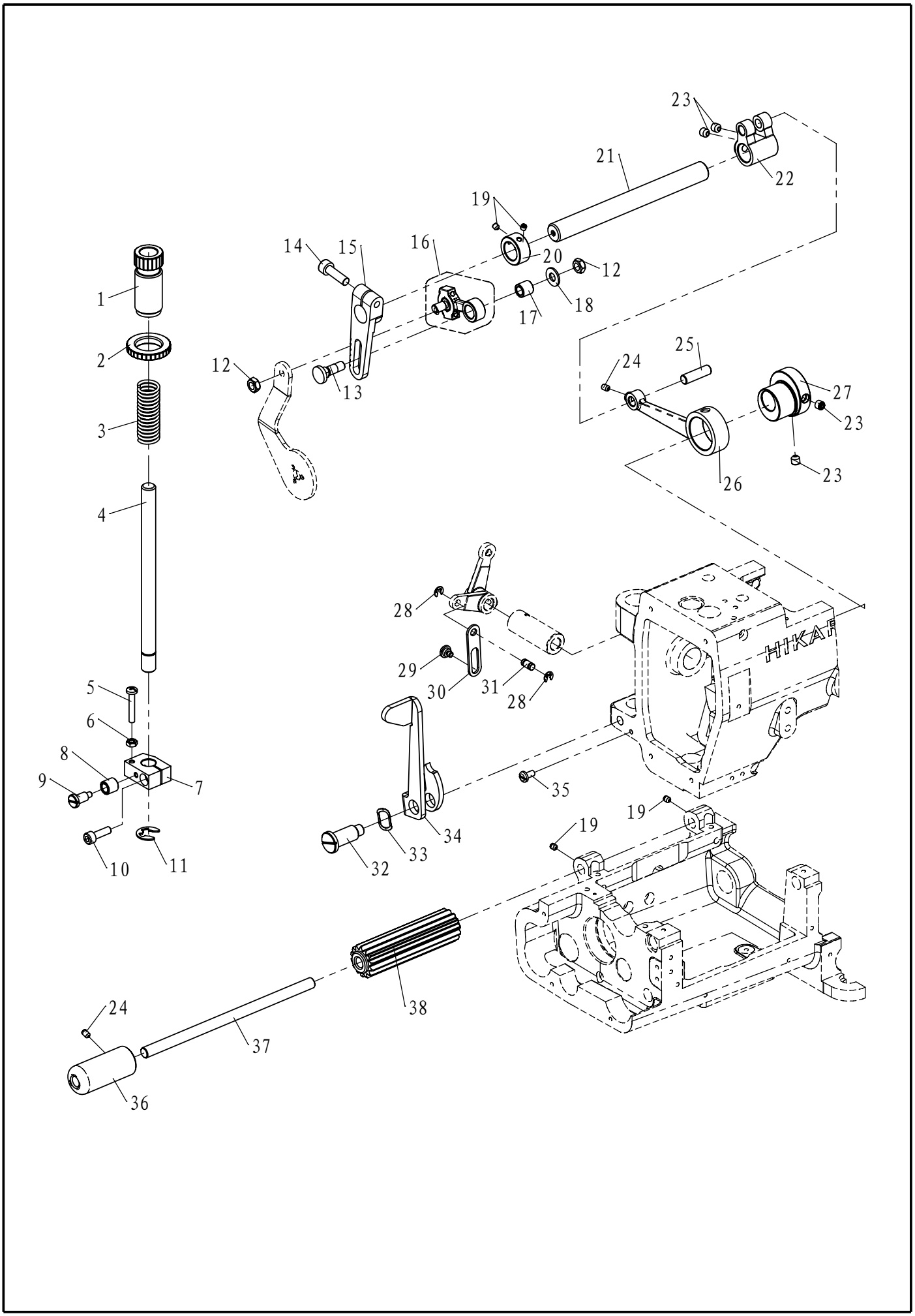

12.拖轮驱动部件　　REAR PULLER MECHANISM

序号	图　号	名　称	NAME OF PARTS	数量
1	331.12-01	滚轮调压螺钉	SCREW	1
2	331.12-02	锁紧螺母	NUT	1
3	331.12-03	上滚轮压簧	SPRING	1
4	331.12-04	上滚轮轴	SHAFT	1
5	01-404002523-1	十字一字槽盘头螺钉 M4×25	SCREW	1
6	03-604000320-1	六角螺母M4	NUT	1
7	331.12-05	上滚轮压簧托架	BRACKET	1
8	331.12-06	扳手滚柱	COLLAR	1
9	331.12-07	滚柱螺钉	SCREW	1
10	01-505001624-1	内六角圆柱头螺钉 M5×16	SCREW	1
11	06-0901018-1	E型挡圈9	E-RING	1
12	04-616400430-1	六角螺母SM1/4"×40	NUT	3
13	331.12-24	球连杆连接销	PIN	1
14	01-506002024-1	内六角圆柱头螺钉 M6×20	SCREW	1
15	331.12-23C	上滚轮摆杆	LEVER	1
16	331.12-22	球连杆组件	CONNENTING ROD	1
17	331.12-21	球连杆滚柱	COLLAT	1
18	05-064121400-1	平垫圈	WASHER	1
19	01-804000414-1	内六角凹端紧定螺钉 M4×4	SCREW	4
20	331.12-27	上滚轮驱动轴挡圈	BUSHING	1
21	331.12-09	上滚轮驱动轴	SHAFT	1
22	331.12-10	上滚轮传动轴杠杆	LEVER	1
23	01-806000614-1	内六角凹端紧定螺钉 M6×6	SCREW	4
24	01-804000614-1	内六角凹端紧定螺钉 M4×6	SCREW	2
25	331.12-11	上滚轮驱动连杆销	PIN	1
26	331.12-12	上滚轮驱动连杆	CONNENTING ROD	1
27	331.12-13	上滚轮偏心轮	ECCENTRIC	1
28	06-0350608-1	E型挡圈3.5	E-RING	2
29	331.12-14	吊板螺钉	SCREW	1
30	331.12-15	升降杆连接吊板	PLATE	1
31	331.08-08	升降杆连接拉板销	PIN	1
32	331.12-16	扳手螺钉	SCREW	1
33	08-1300317-1	被®挡圈n	SCRRW	1
34	331.12-17	上滚轮扳手	LEVER	1
35	01-504000821-1	开槽盘头螺I M4×8	SCREW	1
36	331.12-20	拖料套	GUIDE COLLER	1
37	331.12-19	下滚轮轴	SHAFT	1
38	331.13-03-21	下滚轮	REAR PULLER GEAR	1

13.拖轮部件　　REAR PULLER MECHANISM

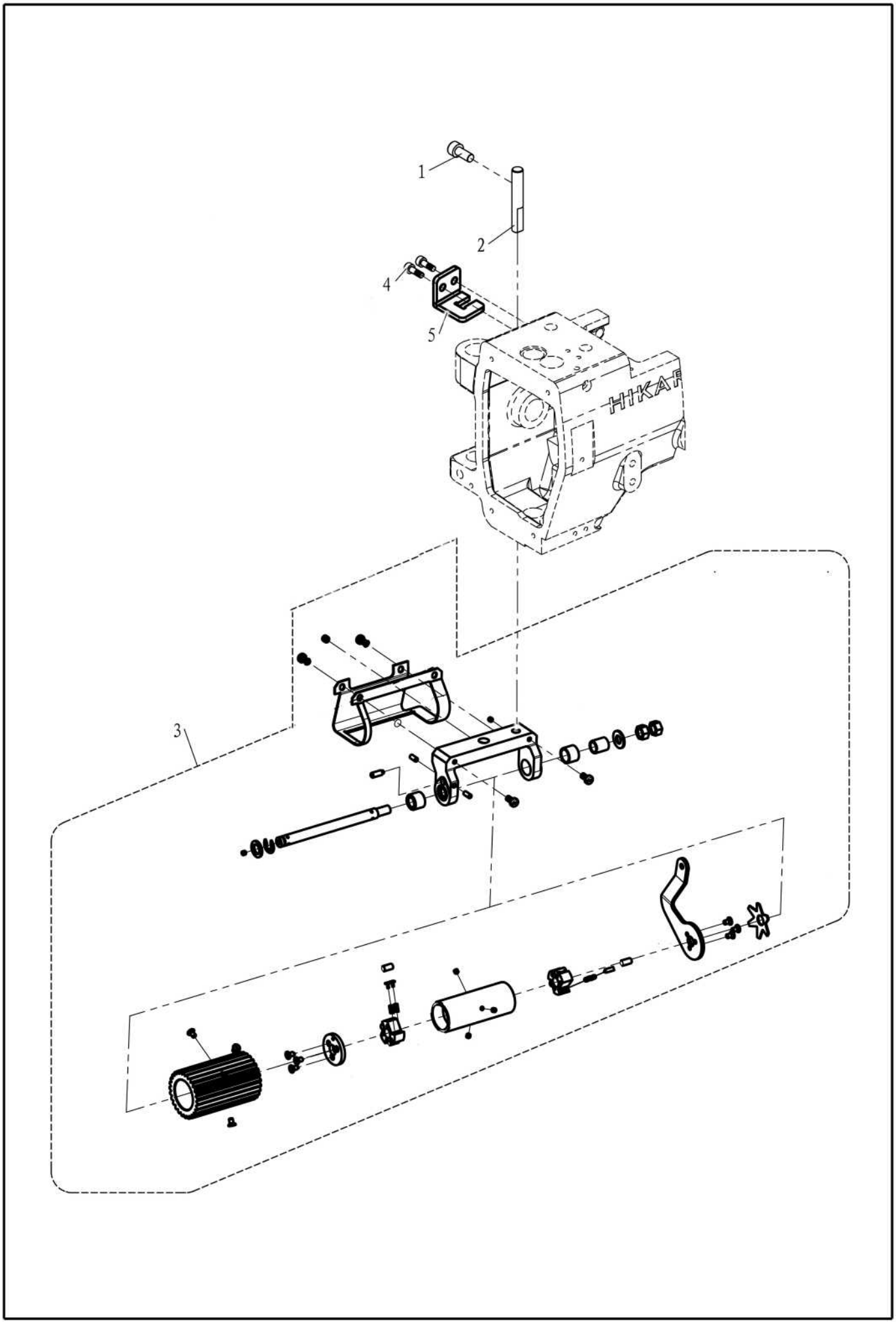

13.拖轮部件 REAR PULLER MECHANISM

序号	图　　号	名　　称	NAME OF PARTS	数量
1	01-506001424-1	内六角圆柱头螺钉 M6×14	SCREW	1
2	331.13-04C	导向销	PIN	1
3	331.13-03	拖轮组件	SMOOTH PULLER ASM.	1
4	331.13-05	导向销导轨	GUIDE	1
5	01-504000821-1	一字槽圆柱头螺钉M4×8	SCREW	2

14. 针板部件　　KNIFE MECHANISM

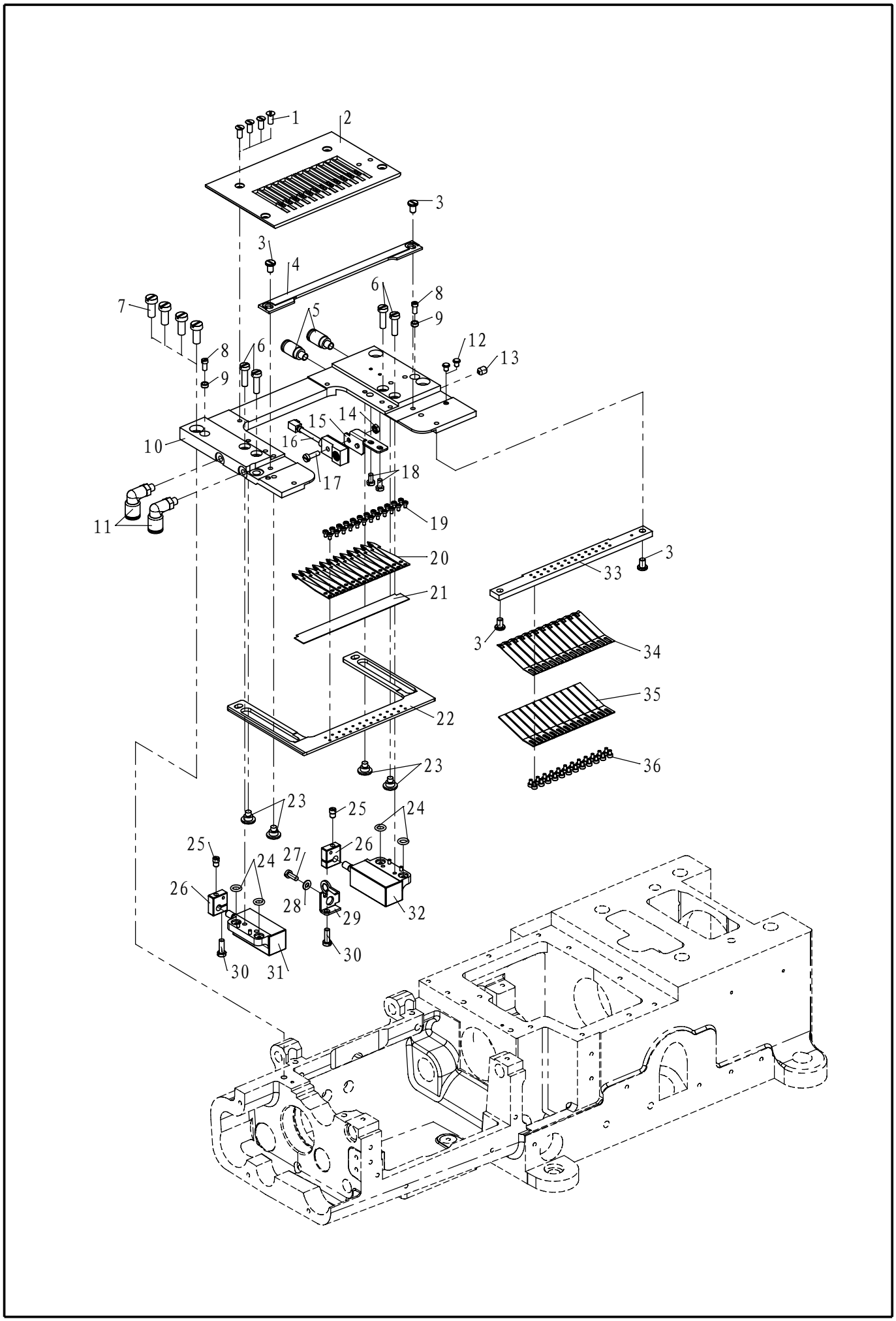

14.针板部件 KNIFE MECHANISM

序号	图号	名称	NAME OF PARTS	数量
1	02-109400821-1	开槽沉头螺钉SM9/64"×40-8	SCREW	4
2	331.14-01G	针板HW800TA-1264	NEEDLE PLATE	1
	332.14-01G	针板HW800TA-0485	NEEDLE PLATE	1
	333.14-01G	针板HW800TA-1332	NEEDLE PLATE	1
	334.14-01G	针板HW800TA-2332	NEEDLE PLATE	1
	335.14-01	针板HW800TA-0464	NEEDLE PLATE	1
3	01-604000621-1	开槽薄帽（1.5)螺钉 M4×6	SCREW	4
4	331.14-02A	定刀	STATIONARY KNIFE	1
5	331.18-07	M5气管接头	JOINT	2
6	01-504001421-1	开槽圆柱头螺钉 M4×14	SCREW	4
7	01-505001221-1	开槽圆柱头螺钉 M5×12	SCREW	4
8	331.14-05	针板销螺钉 M3×6	SCREW	2
9	331.14-06	针板销套	BUSHING	2
10	331.14-04A	针板座	NEEDLE PLATE SUPPORT	1
11	331.18-13	L型弯头4-M5	JOINT	2
12	331.02-12	橡胶缓冲垫	CUSHION RUBBER	2
13	01-805000614-6	内六角槽无帽凹端螺钉M5×6	SCREW	1
14	03-603000240-3	六角螺母M3	SCREW	1
15	331.14-09	开关安装板	PLATE	1
16	331.14-30	检测器	DETECTOR	1
17	01-503001021-1	开槽圆柱头螺钉 M3×10	SCREW	1
18	01-503000621-1	开槽圆柱头螺钉 M3×6	SCREW	2
19	01-502000321-1	开槽圆柱头螺钉 M2×3	SCREW	24
20	331.14-11G	动刀	MOVABLE KNIFE	12
21	331.14-29	布毛清除片	CLEANER	1
22	331.14-14G	动刀架HW800TA-1264	MOVABLE KNIFE BASE	1
	332.14-14G	动刀架HW800TA-0485	MOVABLE KNIFE BASE	1
	333.14-14G	动刀架HW800TA-1332	MOVABLE KNIFE BASE	1
	334.14-14G	动刀架HW800TA-2332	MOVABLE KNIFE BASE	1
	335.14-14	动刀架HW800TA-0464	MOVABLE KNIFE BASE	1
23	331.14-40A	动刀架轴位螺钉	SCREW	4
24	12-040150	O形橡胶密封圈HW800TA	O-RING	4
25	331.14-18	气缸推力销	PIN	2
26	331.14-19A	气缸连接块	GUIDE BRACKET	2
27	01-503000821-1	开槽圆柱头螺钉 M3×8	SCREW	1
28	05-032050700-1	平垫圈	WASHER	1
29	331.14-10	磁钢组件	MAGNEY ASM.	1
30	01-535001021-1	开槽圆柱头螺钉 M3.5×10	SCREW	2
31	331.14-26A	剪线气缸(左)	AIR CYLINDER(R)	1
32	331.14-25A	剪线气缸(右)	AIR CYLINDER(R)	1
33	331.14-15A	动刀弹簧片安装板HW800TA-1264	SPRING BASE	1
	332.14-15A	动刀弹簧片安装板HW800TA-0485	SPRING BASE	1
	333.14-15A	动刀弹簧片安装板HW800TA-1332	SPRING BASE	1
	334.14-15A	动刀弹簧片安装板HW800TA-2332	SPRING BASE	1
	335.14-15	动刀弹簧片安装板HW800TA-0464	SPRING BASE	1
34	331.14-16G	动刀弹簧片	SPRING	12
35	331.14-17G	动刀压板	LEAF SCREW	12
36	01-502000321-1	一字槽圆柱头螺钉M2×3	SCREW	24

15.夹线器部件　　THREAD TENSION MECHANISM

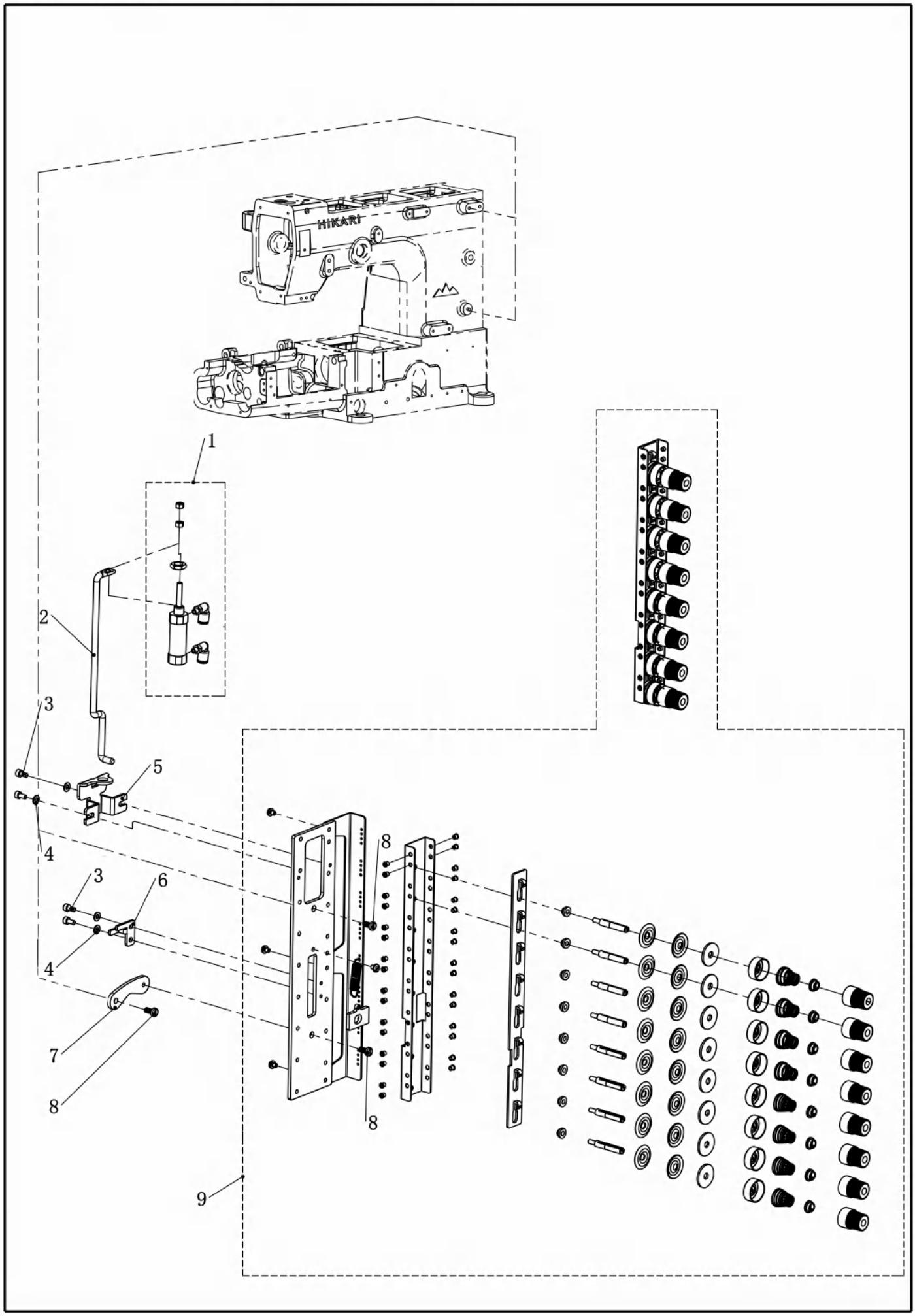

15.夹线器部件 THREAD TENSION MECHANISM

序号	图　　号	名　　称	NAME OF PARTS	数量
1	331.15-01	松线气缸组件	AIR CYLINDER	1
2	331.15-02C	松线顶杆	SHAFT	1
3	01-504000724-1	内六角圆柱头螺钉 M4×7	SCREW	4
4	05-043200900-1	垫片	WASHER	4
5	331.15-06C	松线气缸架	BRACKET	1
6	331.15-03	松线顶杆限位架	BRACKET	1
7	331.15-04	过渡板	PLATE	1
8	01-505001021-1	开槽圆柱头螺钉 M5×10	SCREW	3
9	331.15-05C	夹线器组件	TENSION ASM.	1

16.润滑部件　　LUBRICATION MECHANISM

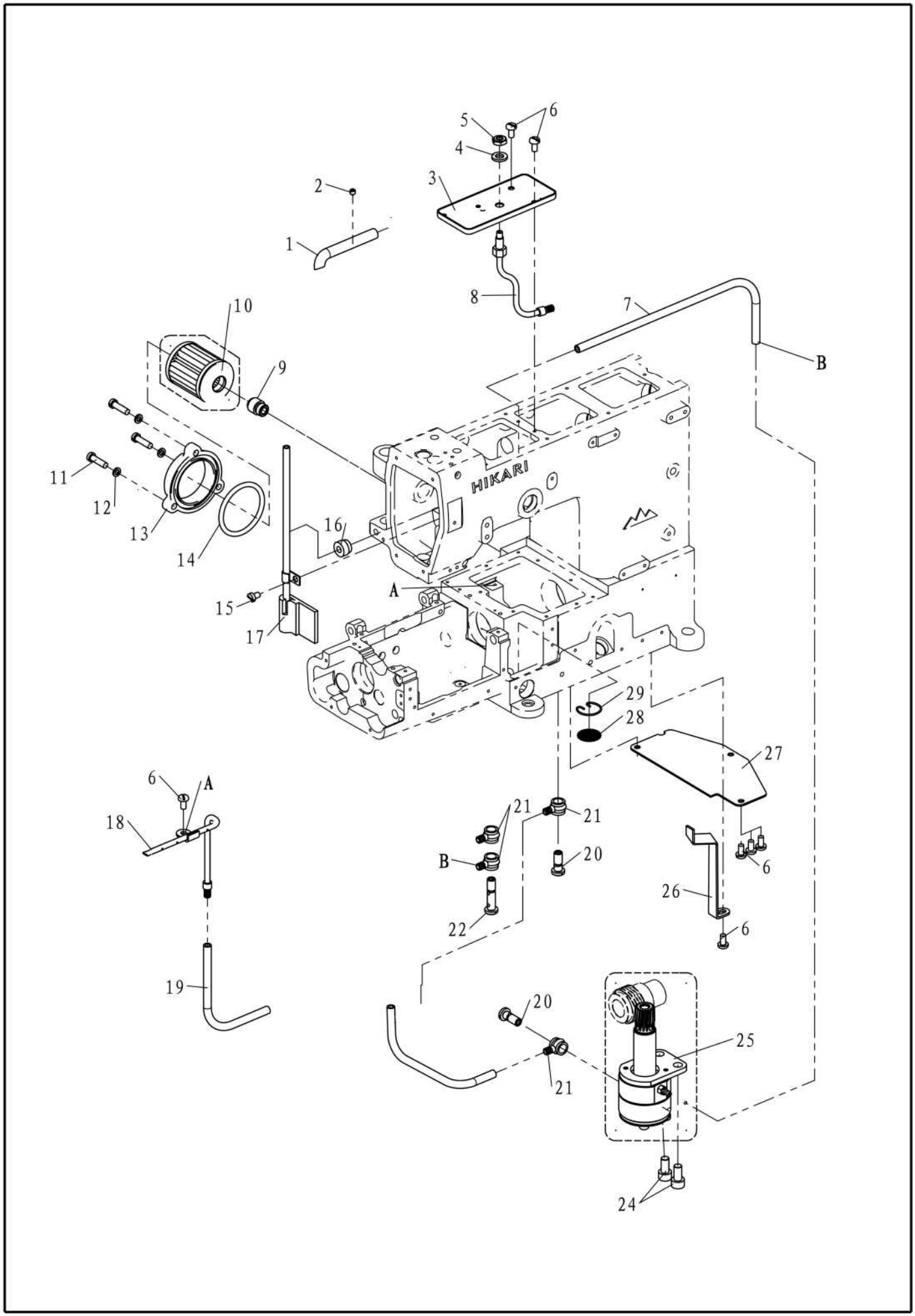

16.润滑部件 LUBRICATION MECHANISM

序号	图　号	名　称	NAME OF PARTS	数量
1	331.16-01	头部供油铜管	TUBE	1
2	01-804000414-1	内六角凹端紧定螺钉 M4×4	SCREW	1
3	331.16-03	油淋盘	OIL RELEASER	1
4	05-064161200-1	平塾圈6	WASHER	1
5	03-606000350-1	六角薄螺母M6	NUT	1
6	01-504000821-1	开槽盘头螺钉 M4×8	SCREW	7
7	201.20-09YGA	油管φ4×φ6 进口	TUBE	1
8	331.16-06	上喷油嘴	JOINT	1
9	331.16-08	滤油器内螺钉	JOINT	1
10	201.14-05	滤油器	OOIL FILTER	1
11	02-511401621-1	开槽圆柱头螺钉 SM11/64"×40-16	SCREW	3
12	05-043100700-1	平垫圈4	WASHER	3
13	351.17-05	滤油器盖	OIL FILTER CAP	1
14	12-390350	O型圈	O-RING	1
15	01-504000621-1	开槽圆柱头螺钉 M4×6	SCREW	1
16	331.16-07A	回油管衬套	BUSHING	1
17	331.16-11A	回油管组件	TUBE	1
18	331.16-13	底座供油管	TUBE	1
19	201.20-09YGA	油管φ4×φ6 进口	TUBE	1
20	331.16-15	放油螺钉(短)	SCREW	2
21	201.14-10	油管接头HX6804-02	JIONT	4
22	331.16-19	放油螺钉(长)	SCREW	1
24	01-506001224-1	内六角圆柱头螺钉 M6×12	SCREW	2
25	331.16-26	油泵组件	OIL PUMP ASM.	1
26	331.16-21	油管固定架	BRACKET	1
27	331.16-20A	挡油板	PLATE	1
28	311.01-12	铜丝网	OIL FILTER SCREEN	1
29	311.01-13	锁簧	CLAMP	1

17.线架部件　　THREAD STAND

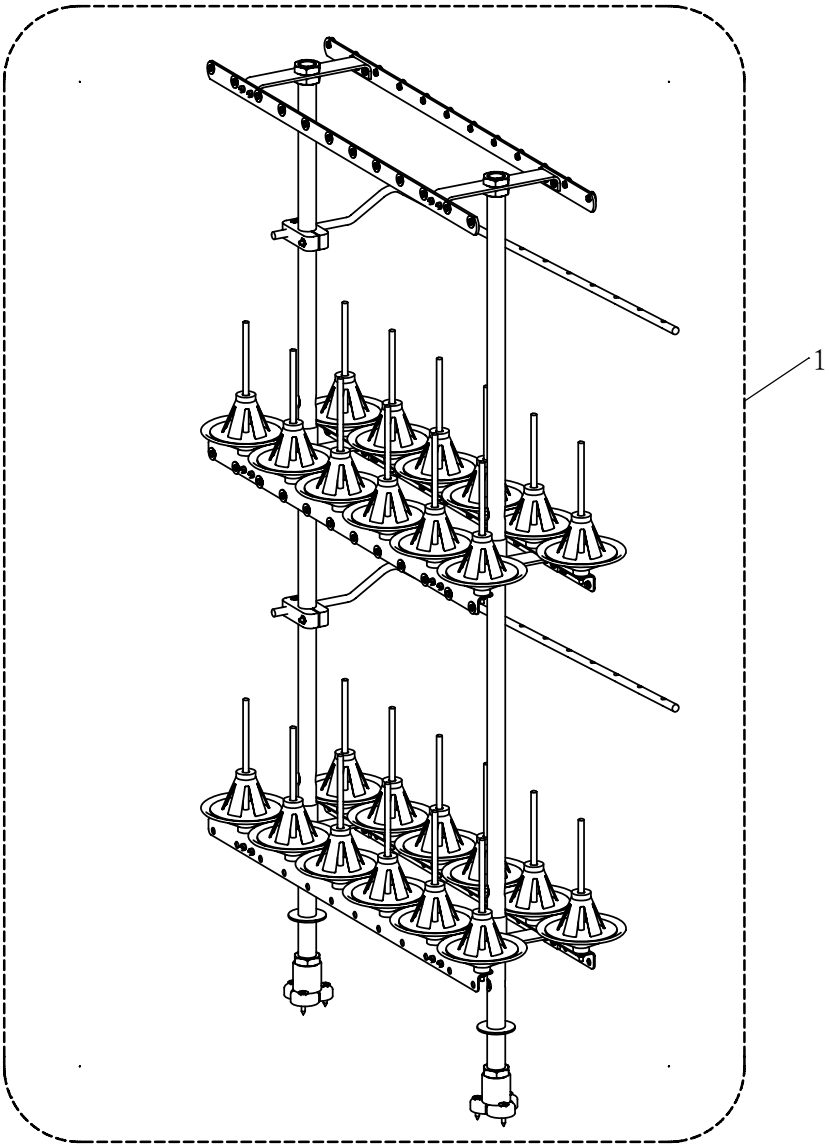

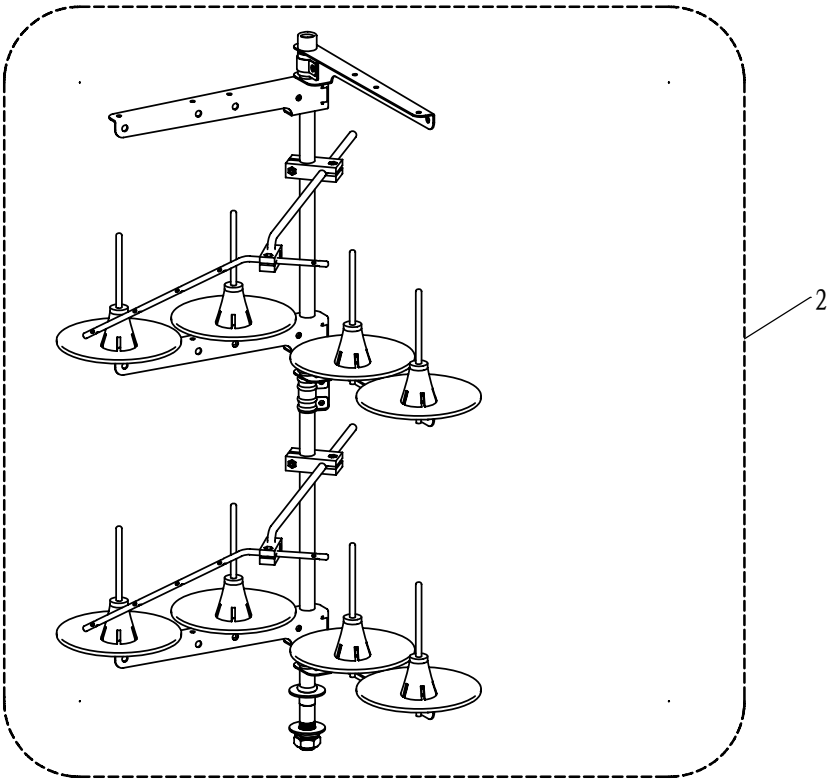

17.线架部件　　THREAD STAND

序号	图　　号	名　　称	NAME OF PARTS	数量
1	331.17-01	12针线架	THREAD FRAME	1
2	332.17-01	4针线架	THREAD FRAME	1

18.气路部件　WIRING AND PIPING

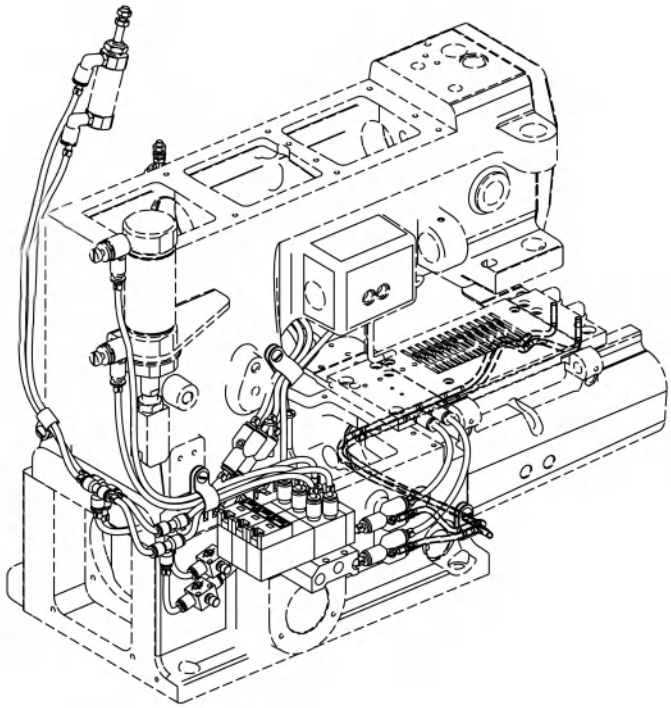

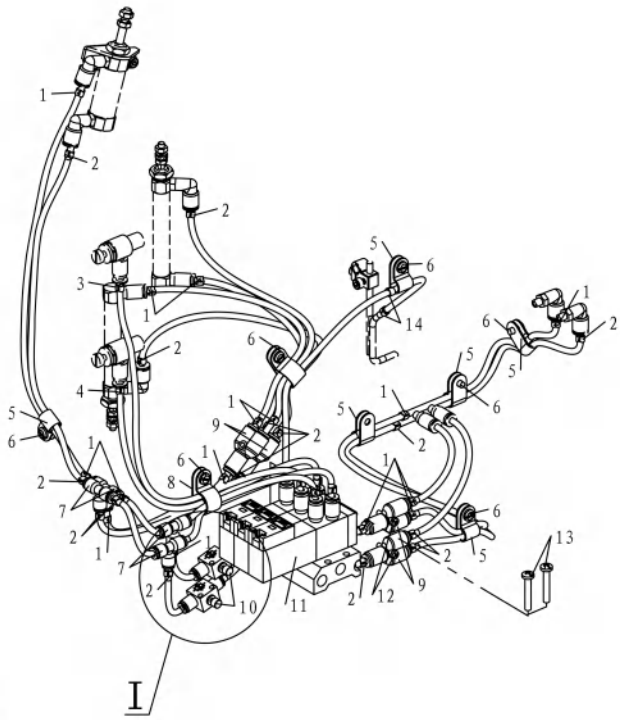

I
1 : 2

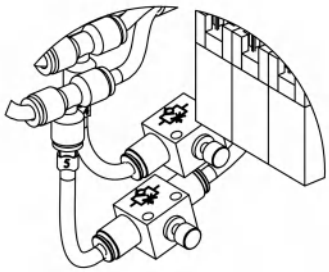

18.气路部件 WIRING AND PIPING

序号	图　号	名　称	NAME OF PARTS	数量
1	331.14-34	号码套管	NUMBER	16
2	331.14-35	号码套管	NUMBER	16
3	331.14-32	号码套管	NUMBER	2
4	331.14-33	号码套管	NUMBER	2
5	331.18-22	气路管夹(中)	CLAMP	6
6	01-504000821-1	开槽盘头螺钉 M4×8	SCREW	8
7	331.18-04	垂直三通接头	JOINT	4
9	331.18-15	平行三通接头	JOINT	4
10	331.18-38	节流阀	AIR VALVE	2
11	74-SY5120-5GD-01(SMC)	电磁阀（二位五通、直接出线）	SOLENOIDO VALVE	4
12	01-403001623-1	十字一字小盘头螺钉 M3×16	SCREW	2
13	01-404002523-1	十字一字槽盘头螺钉 M4×25	SCREW	2
14	331.14-31	号码套管	NUMBER	3

19.四针夹线器部件 THREAD TENSION MECHANISM

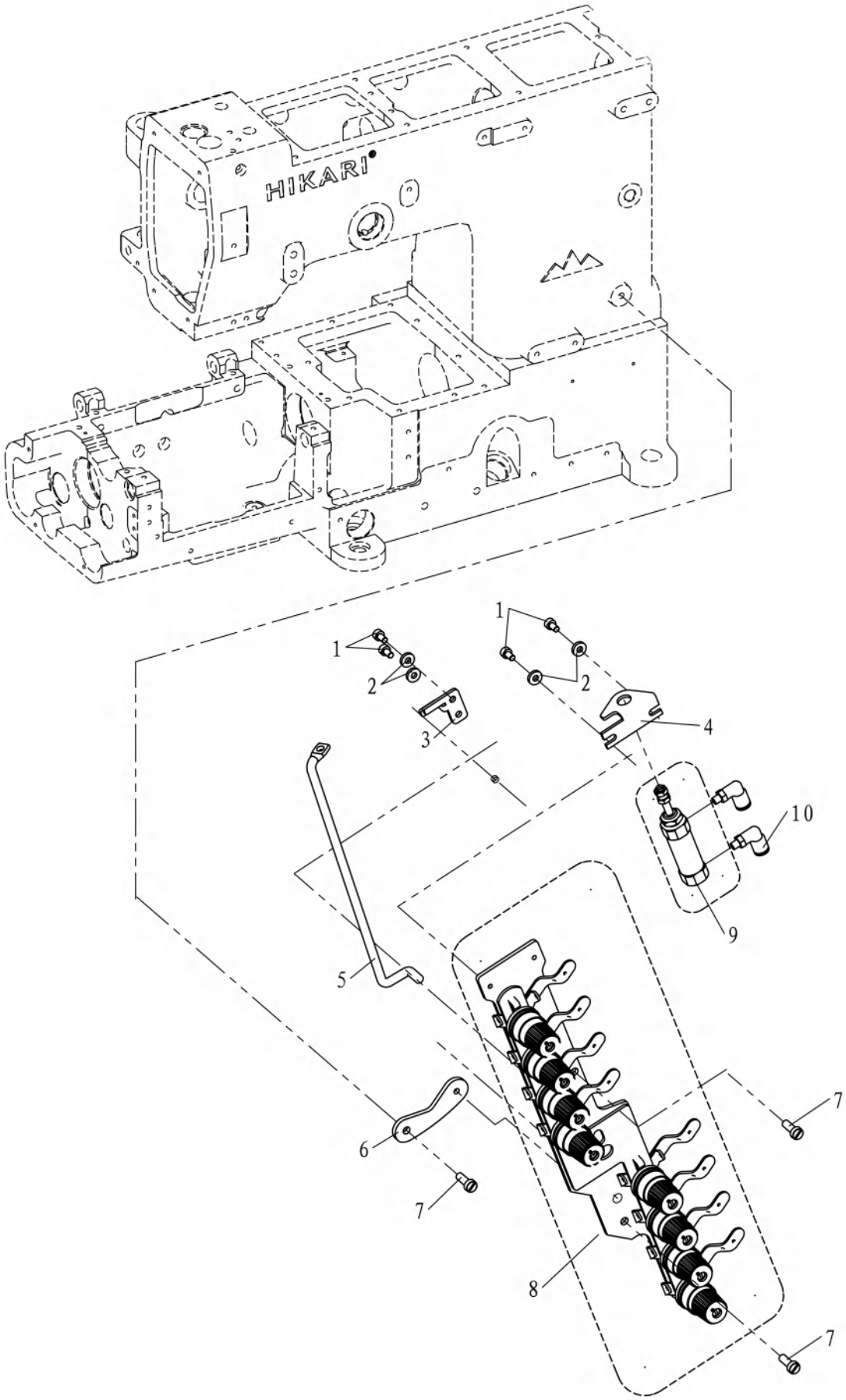

19.四针夹线器部件　　THREAD TENSION MECHANISM

序号	图　　号	名　　称	NAME OF PARTS	数量
1	01-504000724-1	内六角圆柱头螺钉M4×7	SCREW	4
2	05-043200900-1	垫片	WASHER	4
3	331.15-03	松线顶杆限位架	BRACKET	1
4	331.15-06	松线气缸架	BRACKET	1
5	332.15-02A	松线顶杆	SHAFT	1
6	331.15-04	过渡板	PLATE	1
7	01-505001421-1	开槽圆柱头螺钉M5×14	SCREW	3
8	332.15-05A	4针夹线器组件	TENSION ASM	1
9	331.15-01	松线气缸组件	AIR CYLINDER	1
10	331.18-13	L型弯头4-M5	JOINT	2

20.附件　　ACCESSORIES

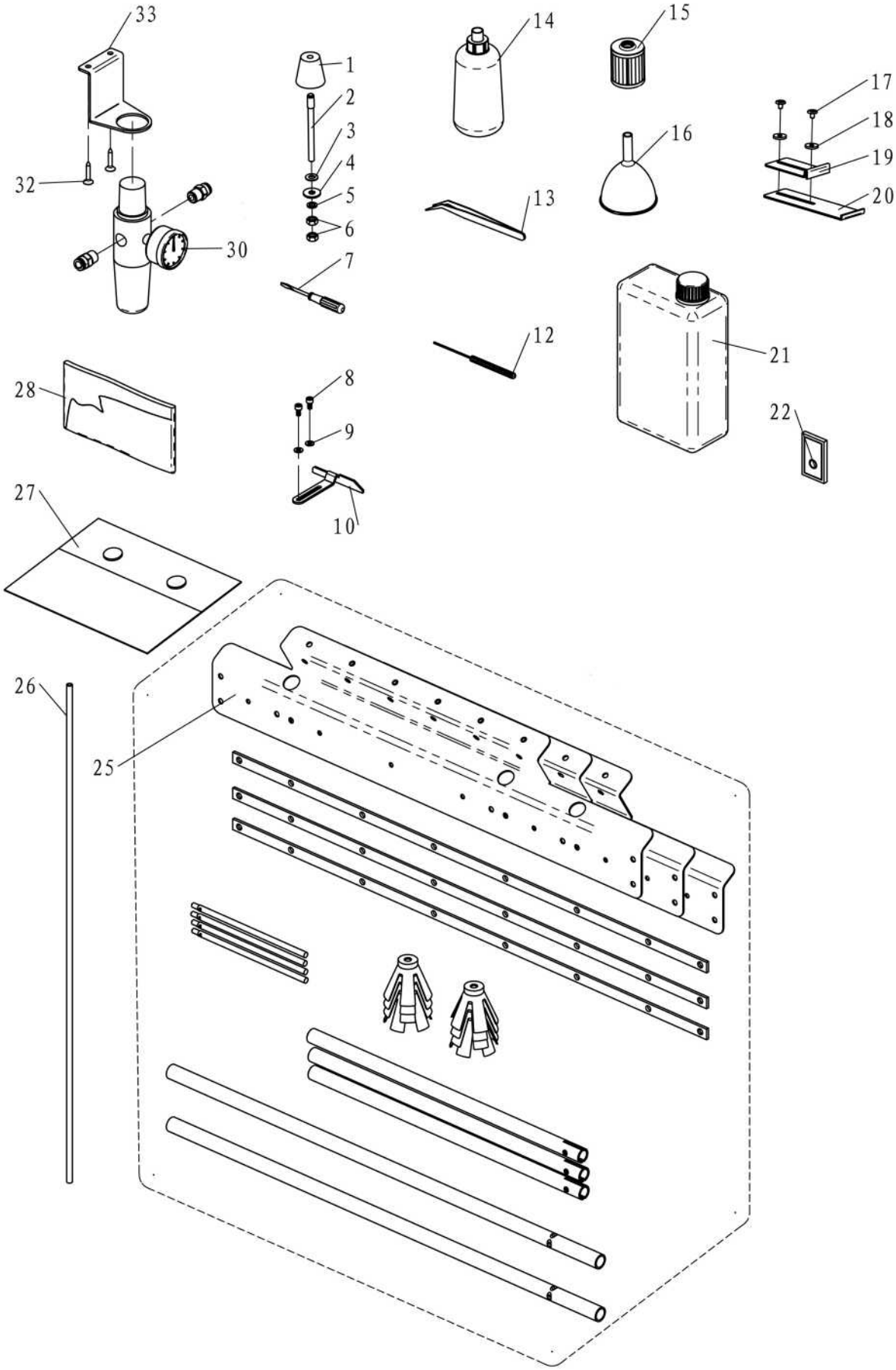

20.附件　　ACCESSORIES

序号	图号	名称	NAME OF PARTS	数量
1	331.20-01	机头防震塾	RUBBER CUSHION	4
2	351.20-01	防震垫支撑销	SCREW	4
3	05-062081301-1	垫片	WASHER	4
4	05-064161800-1	垫片	WASHER	4
5	07-0631616-1	弹性垫圈	SPRING WASHER	4
6	03-606000500-1	六角螺母M6	NUT	8
7	113.16-19	两用螺丝刀	SCREW-DRIVER(SMALL)	1
8	01-504000824-1	内六角圆柱头螺钉 M4×8	SCREW	2
9	05-043080900-1	平垫圈	WASHER	2
10	331.20-12	导布板	BRACKET	1
11	103.20-04-04	内六角扳手3	ALLEN KEY 3	1
12	201.22-07-08-16	有手柄六角扳手（1.5)	ALLEN KEY 1.5	1
13	201.22-07-08-13	镊子	TWEZERS	1
14	103.20-50	小油壶	OILER	1
15	201.14-05	滤油器	OOIL FILTER	1
16	201.22-07-08-10	漏斗	OIL FUNNEL	1
17	01-604000521-1	一字槽大帽螺钉M4×5	SCREW	2
18	05-043201350-1	平垫圈	WASHER	2
19	331.02-01	拦料短板	SHORT ELASTICGUIDE	1
20	331.02-02	拦料长板	LONG ELASTICGUIDE	1
21	201.22-06C	大油壶HW782T（A）	OIL	1
22	331.07-10	机针UO×113GS90/14	NEEDLE	1
25	331.17-01	12针线架HW800T	THREAD STANDBOX	1
26	80-05008001-01	气管（蓝色）Φ5XΦ8		1
27	201.22-07-08-11	附件袋	ACCESSORIES BAG	1
28	103.20-52	机头罩	HEADCOVER	1
30	HX6800-12-10-01	气压表与分水滤气器	REGULATOR	1
32	21-3501932-4	十字半沉头木螺钉	SCREW	2
33	382.07-10	气压表安装板	BRACKET	1

HIKARI® 富山

FOCUSING ON
NEW TECHNOLOGY AND AUTOMATION
专注新技术与自动化

HP-005 ELECTRCHIC CONTROL BOX 电控箱

使用说明书
INSTRUCTION MANUAL BOOK

上海富山精密机械科技有限公司
Hikari(shanghai)precise Machinery Science&technology Co.,Ltd

中国上海市金山区朱泾工业园区中达路800号
NO.800.zhongda Road,jinshan Zone,shanghai,china
电话：（00）86-21-67311111
TEL：（00）86-21-67311111
传真：（00）86-21-67311311
Fax：（00）86-21-67311311
E-mail:hikari@chinahikari.com
http:www.chinahikari.com

此说明书仅作参考，如有更改恕不另作通知。
This manual is only for reference.
IF there is any modification , we apologize for the changing hence caused.

通过 ISO9001:2008
质量管理体系认证

前　　言

感谢您选用本公司的产品，该手册提供了此系统所需要的操作指导说明。

为了您更好地使用该产品，在使用之前请仔细阅读本手册。

- 由于产品的改进，本手册内容可能随时变更，恕不另行通知。
- 您在使用中若有任何疑问或对我们的产品和服务有任何意见，请随时与我　们售后服务部联系。

PREFACE

Thank you for selecting our product. The introduction provides necessary knowledge and notes for using.

Please read safety introduction carefully and understand them before using.

- The content of the introduction will be amended with the improvement of our product, the notice is not announced.
- If you have any doubts or comments about our product and service, please contact after-sale service.

目　　录

0. 主要技术数据 3
1、 安全注意事项 3
1.1 使用范围 3
1.2 工作环境 3
1.3 安装 3
1.4 保养维修的规定 3
1.5 危险提示 4
1.6 其它安全规定 4
2. 安装与调整 4
2.1 控制箱的安装 4
2.2 停针位的调整 4
2.3 脚踏板后踏力量的调整 5
3. 接线与接地 5
3.1 电源线的接法 5
3.2 控制器接线端子图： 6
3.2.1 通用型接线端子图（平缝、绷缝和包缝等） 5
3.2.2 专用型接线端子图（包缝（含第三光眼功能）） 6
3.2.3 专用型接线端子图（细嘴包缝） 7
4. 主控制箱面板操作说明书 8
4.1 主控制箱面板的布局如下示意图 8
4.2 待机状态 8
4.3 缝纫模式及各段针数设置 9
4.4 前固缝方式及针数设置 10
4.5 后固缝方式及针数设置 10
4.6 工艺参数设置 11
4.7 常用参数说明表 13
5. 故障码/故障原因/故障排除方法表 15
6. 七段数码管显示值与实际数值对照表 16

0. 主要技术数据

供电电压范围：AC220V±15%
供电电源频率：50Hz/60Hz

1、 安全注意事项

1.1 使用范围

本伺服控制器是为工业缝纫机开发设计的，如果在其它方面使用，请注意使用者的安全。

1.2 工作环境

1.2.1 电源电压请遵照控制箱铭牌所标示电压±15%范围内。
1.2.2 请远离高频电磁波发射器等，以免所产生的电磁波干扰本控制器而发生错误动作。
1.2.3 温湿度 ：
a.请在室温 5°C 以上、 45°C 以下的场所操作。
b.禁止在日光直接照射的场所或室外运作。
c.请不要过于接近暖气 (电热器) 旁运作。
d.请保持 30 % ~ 95 % 相对湿度（无凝露）。
1.2.4 请不要在可燃气体或爆炸物附近操作。

1.3 安装

1.3.1 控制器请遵照说明书进行正确安装。
1.3.2 安装前请先关闭电源并拔掉电源线插头，然后进行安装。
1.3.3 装钉电源线时请避免靠近会转动部件，最少要离开 3 公分以上。
1.3.4 为防止噪声干扰或触电事故，请将缝纫机、控制箱接地。
1.3.5 打开电源之前，确定此供应电压必须符合标示在控制箱铭牌上的指定电压±15%范围内。

1.4 保养维修的规定

1.4.1 在操作保养或维修动作前，请先关闭电源。
1.4.2 翻抬机头时，与更换机针或梭子或穿线时，请确认电源已关闭。
1.4.3 控制箱里面有危险高压电，所以关闭电源后要等 5 分钟以上方可打开控制箱盖。
1.4.4 修理及保养的作业，要请经过训练的技术人员执行。
1.4.5 不能在电机及控制箱运转的狀态下进行保养或维修。
1.4.6 所有维修用的零件，须由本公司提供或认可，方可使用。

1.5 危险提示

这个标示符号表示机器在安装时，安全上需要特别加以注意的事项，忽视此标记而进行错误操作可能会导致人员或是机器损伤。

1.6 其它安全规定

1.6.1、在第一次接通电源后，请先以低速操作缝纫机并检查转动方向是否正确。
1.6.2、缝纫机运转时，请不要去触摸上轮、机针等会动作的部位。
1.6.3、所有可动作的部份，必须以所提供的防护装置加以隔离，防止身体接触并请勿在装置内塞入其它物品。
1.6.4、请不要在拆下电机护罩及其它安全装置的情形下操作。
1.6.5、不要使电机或控制箱掉在地上。
1.6.6、不要让茶水等液态物体流入控制箱或电机内部。

2. 安装与调整

2.1 控制箱的安装

1).将控制箱及脚踏控速器安装于台板下方　2). 将踏板与控速器安装连结　3).安装后示意图

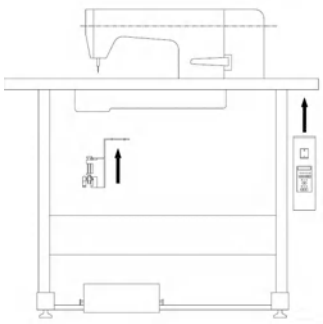

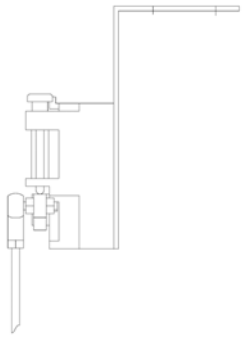

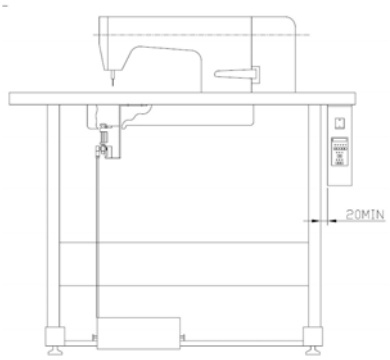

2.2 停针位的调整

2.2.1、 松开手轮上的磁钢固定螺丝，调整位置后重新固定；
2.2.2、 如果实际上停针位超过了预期上针位，将信号磁钢固定盘顺手轮旋转方向调节，反之，逆手轮旋转方向调节。

2.3 脚踏板后踏力量的调整

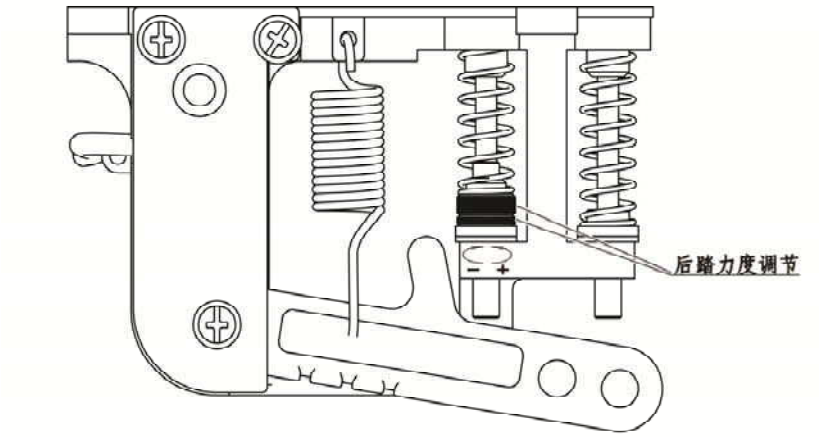

调整需求	调 整 结 果
踏板后踏力量的调整	当螺栓愈向上时，则后踏力量愈重。当螺栓愈向下时，则后踏力量愈轻。

3. 接线与接地

3.1 电源线的接法

本控制器适用于AC220V单相电源，电压输入范围为铭牌标示电压±15%。

注意：

黄/绿色电源线为接地线，为了人员安全及设备可靠工作，一定要做好系统的接地工程。

3.2　控制器接线端子图：

3.2.1 通用型接线端子图（平缝、绷缝和包缝等）

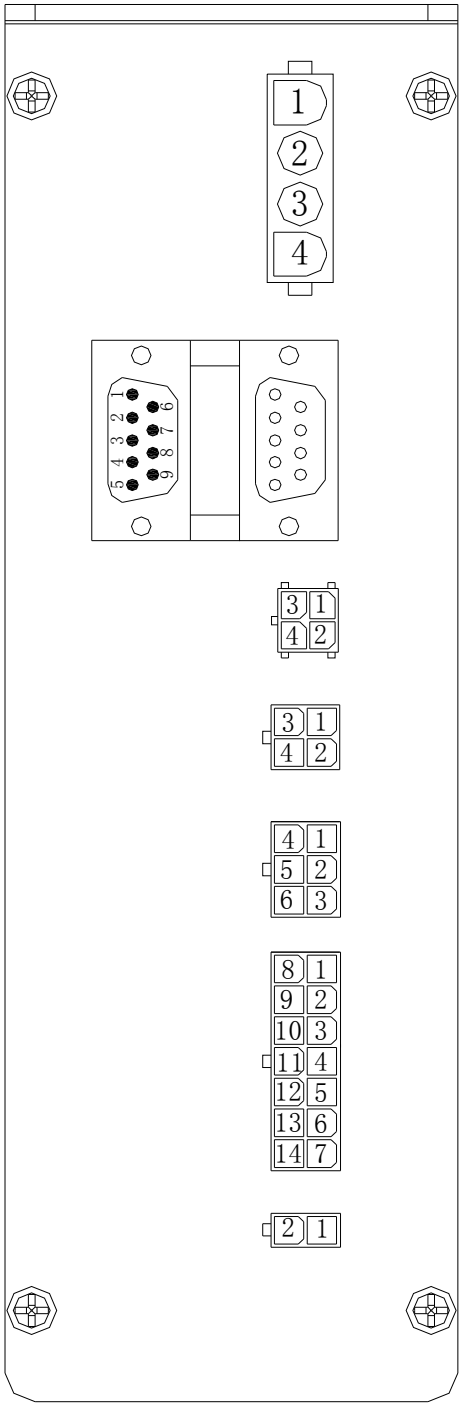

1、大地

2、U相输出

3、V相输出

4、W相输出

1、+5V
2、速度信号
3、立式脚踏剪线控制
4、立式脚踏识别
5、GND
6、GND
7、GND
8、立式脚踏抬压脚控制
9、+5V

1、TXD
2、+12V
3、RXD
4、GND

2、安全开关

4、+5v

1、针位输出
2、GND
3、GND
4、布边传感器信号
5、GND
6、布边传感器电源

1、+30v	8、剪线输出
2、+30v	9、挑线输出
3、大地	10、+30V
4、+30v	11、NC
5、GND	12、手动到缝开关
6、+30V PWM	13、到缝输出
7、GND	14、+5V照明

1、+30V PWM　2、抬压脚输出

3.2.2 专用型接线端子图（包缝（含第三光眼功能））

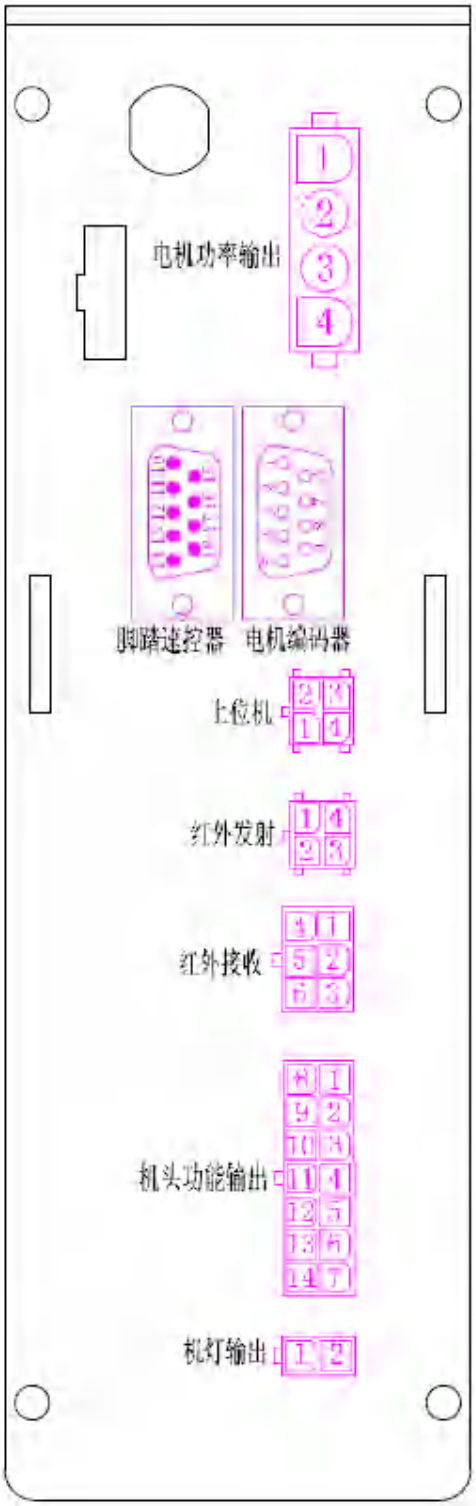

1	接地线			电机功率输出			
2	电机U相						
3	电机V相						
4	电机W相						
脚踏控速器				电机编码器			
10	+5V	15	GND	1	+5V	6	UH
11	定速信号	16	GND	2	上针位	7	VH
12	立式脚踏剪线控制	17	立式脚踏抬压脚控制	3	下针位	8	WH
13	立式脚踏识别	18	+5V	4	码盘B	9	GND
14	GND			5	码盘A		
2	RXD	3	TXD	上位机			
1	GND	4	+12V				
1	红外发射前	4	+5V	红外发射			
2	红外发射中	3	红外发射后				
4	红外接收前	1	+5V	红外接收			
5	红外接收中	2	+5V				
6	红外接收后	3	+5V				
8	剪线电磁铁	1	+30V	机头输出功能			
9	压脚电磁铁	2	+30V				
10	吸风电磁铁	3	预留				
11	拉轮电磁铁	4	预留				
12	压脚安全开关	5	GND				
13	手动开关	6	GND				
14	缝台安全开关	7	+5V				
1	+12V	2	照明输出	机灯输出			

3.2.3 专用型接线端子图（细嘴）

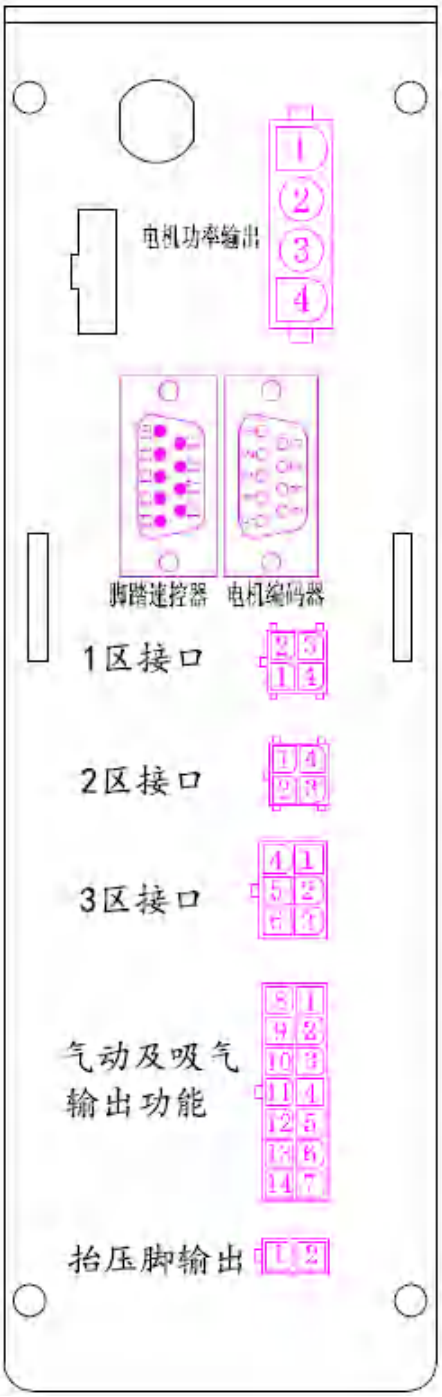

1	接地线			电机功率输出			
2	电机U相						
3	电机V相						
4	电机W相						
脚踏控速器				电机编码器			
10	+5V	15	GND	1	+5V	6	UH
11	定速信号	16	GND	2	上针位	7	VH
12	立式脚踏剪线控制	17	立式脚踏抬压脚控制	3	下针位	8	WH
13	立式脚踏识别	18	+5V	4	码盘B	9	GND
14	GND			5	码盘A		
2	无	3	无	1区接口			
1	无	4	无				
1	无	4	无	2区接口			
2	无	3	无				
4	无	1	无	3区接口			
5	无	2	无				
6	无	3	无				
8	无	1	无	气动及吸气输出功能			
9	膝控开关	2	+30V				
10	无	3	无				
11	无	4	无				
12	气动支撑架输出	5	GND				
13	吸气输出	6	+30V				
14	无	7	无				
1	+30V	2	抬压脚输出	抬压脚输出			

各部的连接插头于插入控制箱的插座时，要注意其形状和方向性，并确实插好。

4. 主控制箱操作说明

4.1 主控制箱面板的布局如下示意图

主控制箱（简称下位机）面板的布局如下示意图，共包含 T1~T6 六个数码管、十一个 LED 以及十个按键。面板有待机、缝纫模式设置、前固缝方式设置、后固缝方式设置、工艺参数设置共五种状态。

4.2 待机状态

1.上电后,面板显示待机状态，N、P、F、SWM、SBM、EBM 全熄;各功能键上方的 LED 灯按当前参数值显示;

数码管 T1 T2 显示当前缝纫模式代码(00：自由缝；01：定长缝；02：四段缝；03：七段缝；04：八段缝；05：W 缝)，其余各数码管显示“-”。以当前缝纫模式是自由缝为例，显示如下：

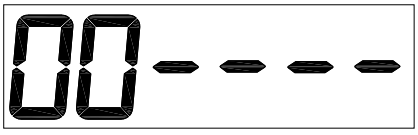

2.选择 键，对应的抬压脚、剪线、慢启动、停针位、自动触发等功能将被设置或取消，同时对应的 LED 点亮或熄灭；

4.3 缝纫模式及各段针数设置

待机状态下按 键，进入缝纫模式设置状态:SWM 亮，其余 LED 全熄;

数码管 T1 T2 显示当前缝纫模式代码（00：自由缝；01：定长缝；02、四段缝；03：七段缝；04：八段缝；05：W 缝），若为定长缝或多段缝，数码管 T3 显示当前段代号“E、F、G、H”，数码管 T5、T6 显示当前段针数；

以四段缝为例，显示如下：

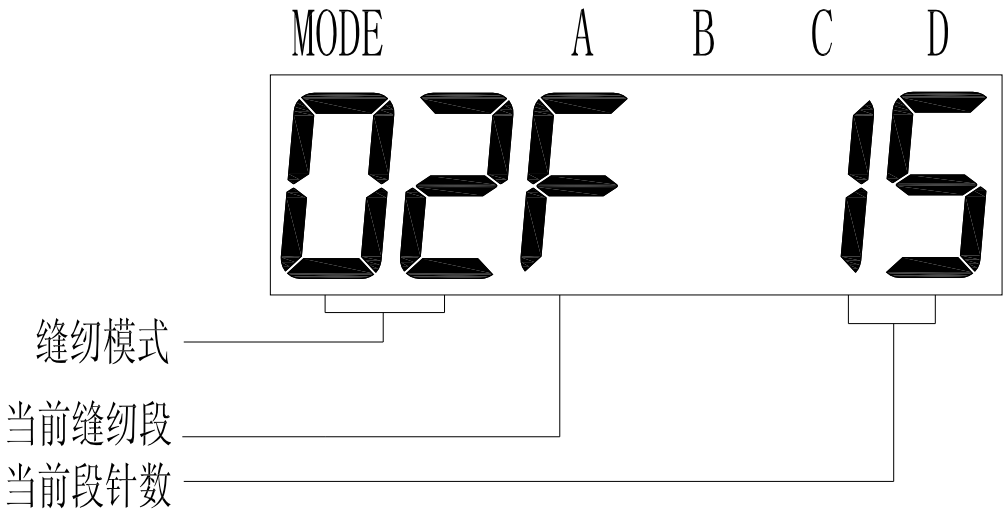

若为自由缝，不显示当前缝纫段;

缝纫模式及段号针数选择:

1.按下 键，数码管 T1T2 可在 00~05 之间循环显示当前缝纫模式;

2.按下 键，数码管 T3 可在 “E、F、G、H”之间循环显示当前段号;

3.按下 或 键，对应的针数加 10 或加 1，0－99 之间循环；. 、 键无效;

按下 键，返回待机模式。

4.4 前固缝方式及针数设置

1. 在待机状态下、缝纫模式设定状态下或后固缝设定状态下:按键，均可进入前固缝方式设置状态，此时 SBM 灯亮，其余 LED 熄灭，T1 显示当前的前固缝方式;

2. 按下键，数码管 T1 循环显示前固缝方式:0（无前固缝）、1（单前固缝）、2（双前固缝）、3（四前固缝），T3、T4 分别显示当前的固缝针数，以前双固缝为例，显示如下：

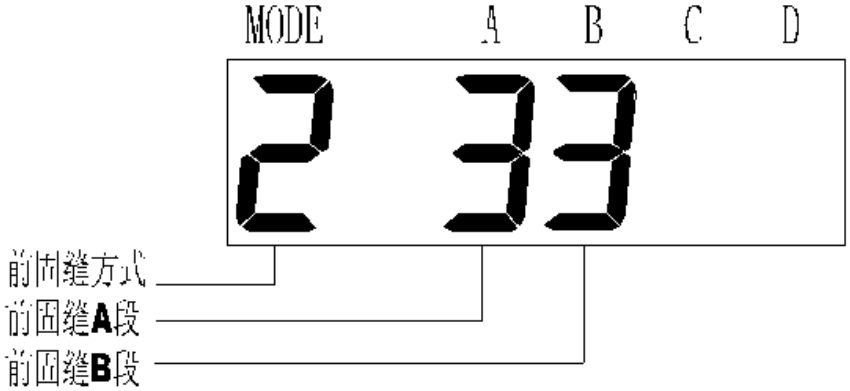

按，其上方对应的针数加一，在 0~F 之间循环切换，按键返回待机状态。

4.5 后固缝方式及针数设置

1. 在待机状态下、缝纫模式设定状态或后固缝设定状态下，按键，均可以进入后固缝方式设置状态，此时 EBM 亮，其余 LED 熄灭，T2 显示当前的后固缝方式;

2 .按下键,数码管 T2 循环显示后固缝方式:0（无后固缝）、1（单后固缝）、2（双后固缝）、3（四后固缝），

3. T5、T6 分别显示当前的固缝针数，以后双固缝为例，显示如下：。

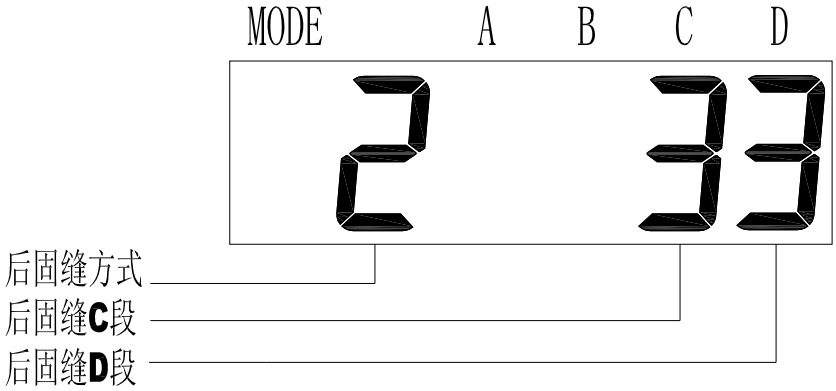

按，其上方对应的针数加一，在 0~F 之间循环切换，按键返回待机状态。

4.6 工艺参数设置

4.6.1 密码输入

1.在待机状态下连续按两次 键，P 灯点亮，其它 LED 灯全熄，此时便进入了工艺参数设置状态，数码管显示密码输入:界面如下图所示：

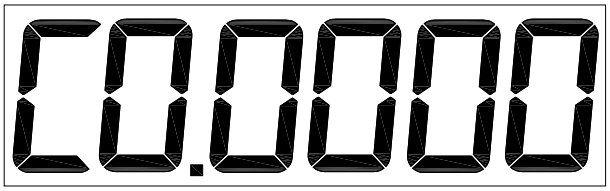

2.,按 键,可以输入密码，(出厂密码 2222 输入后，按 确认。如果所输入的密码正确，则进入工艺参数修改状态。显示如下：

4.6.2 工艺参数修改

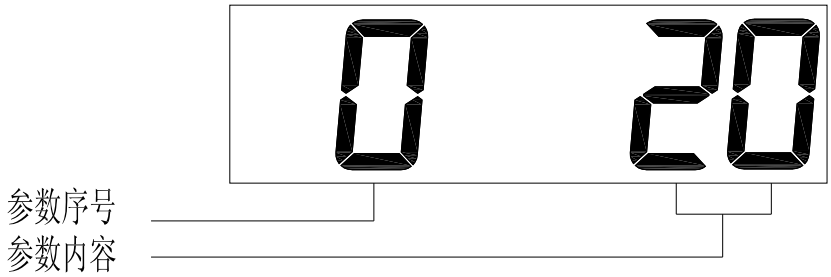

1.在工艺参数设定状态下, 键为序号递增键,按该键可进行加 1 操作.,(序号值:0-99)

2 在状工艺参数设定态下, 键为序号递减键,按该键可进行减 1 操作,,(序号值:0-99)

3 各键在此状态下为参数设定键，每按一键，参数的对应位加 1（如果加 1 后的参数值超出该参数的范围则不加）；每一个参数设置完后按 键，保存该参数值，再按一次 键返回待机模式。

4.7 常用参数说明表

(单位说明: RPM 转/分钟; ms 毫秒; s 秒; hour 小时;)
序号带*表示该参数修改后需要重新上电才能生效.

序号	功能参数	默认值	设定范围	单位	参数说明
P0	踏板斜率	20	1~100	%	斜率越大，低速区域越大，速度变化越大；斜率越小，低速区域越小，速度变化越小。
P1	速度比例	8	1~8		自由缝最高速度的限定比例。将自由缝最高速度分成 8 等分，通过调整等分值来改变当前自由缝最高速度
P2	系统最低转速	200	150~500	RPM	缝纫时，机头最低转速限制
P3	自由缝最高转速	4000(平缝系列) 3000(双针系列) 5500(包缝系列)	150~5000 150~4000 150~7500	RPM	自由缝模式时，机头最高转速
P4	定速缝速度	3500(平缝系列) 3000(双针系列)	200~4000	RPM	定长缝自动触发时的缝纫速度
P5	前固缝速度	1800	200~3000	RPM	执行前固缝时的缝纫速度
P6	后固缝速度	1800	200~3000	RPM	执行后固缝时的缝纫速度
P7	前固缝完暂停	off	On/off		前固缝完毕暂停，需要踏板触发后模式才继续运行
P8	后固缝前暂停	off	On/off		后固缝前暂停，需要踏板触发才执行后固缝
P9	W 缝速度	1800	200~3000	RPM	W 缝模式时的缝纫速度
P15	倒缝最高速度	2500	200~3000	RPM	倒缝时的最高速度
P16	扫线通电时间	50	20~1000	ms	扫线电磁铁的动作时间
P17	暂停过程中按键是否吸合倒缝电磁铁	on	On/off		当电机不运转时，按倒缝键是否允许倒缝电磁铁动作
P18	针迹/速度优先	0	0~1		缝纫时，针迹或速度的优先级别设定 0：针迹优先 1：速度优先
P19*	抬压脚开关	On	On/off		开启或关闭抬压脚功能
P21	计数功能选择	0	0~2		0:无计数功能 1:底线计数功能 2:剪线计数功能

P22	慢启动针数	2	0~15		以慢启动速度缝纫的针数
P23	慢启动速度	500	200~3000	RPM	慢启动缝纫时的速度
P24	底线基数	10	1~100		底线变化多少针时，当前计数变化 1 个单位。
P25	底线总数	2000	1~9999		设定的底线总数
P26	当前计数	2000	0~9999		当前的底线数量
P27	倒缝全额启动时间	200	20~500	ms	倒缝电磁铁的初始出力时间
P28	倒缝通电时间	2	1~50	ms	倒缝电磁铁力度保持时的高电平时间
P29	倒缝断电时间	2	1~50	ms	倒缝电磁铁力度保持时的低电平时间
P34 *	上电找针位	On	On/off		上电后，是否自动找到上针位点。
P36	剪线速度	250	200~500	RPM	剪线时的运转速度
P37 *	半后踏自动抬压脚	on	On/off		开启或取消半后踏自动抬压脚
P39	第一针速度限定	3000	200-4000	RPM	第一针缝纫时的速度限定
P40	前固缝补偿参数 1	7（平缝系列） 12（双针系列）	0-16		前固缝针迹补偿参数 1
P41	前固缝补偿参数 2	5	0-16		前固缝针迹补偿参数 2
P42	后固缝补偿参数 1	7（平缝系列） 12（双针系列）	0-16		后固缝针迹补偿参数 1
P43	后固缝补偿参数 2	5	0-16		后固缝针迹补偿参数 2
P44	W 缝补偿参数 1	7（平缝系列） 12（双针系列）	0-16		W 缝针迹补偿参数 1
P45	W 缝补偿参数 2	5	0-16		W 缝针迹补偿参数 2
P46	手动老化开关	0	0/1		0：正常操作模式 1：老化拖车模式
P47	老化停顿时间	2000	100-9999	ms	老化时每次运行之间的时间间隔
P48	老化运行时间	2000	100 — 9999	ms	老化时每次运行的时间（在没有定位器时有效）
P49 *	电机运转方向	1	0/1		0:CCW 1:CW
P51 *	剪刀模式	0	0/1		0: 内置剪刀 1: 外置剪刀。
P52	外剪刀工作时间	100	30~9999	ms	外剪线的动作时间
P53	外扫线工作时间	70	20~9999	ms	外扫线的动作时间
P54	安全开关信号型式	0	0/1		0：常开 1：常闭

P56	机头工作时间	0	0~9999	hour	机头已经工作了多长时间(每个小时加 1)
P57	抬压脚启动时间	250	20~1000	ms	抬压脚电磁铁的初始出力时间
P58	抬压脚通电时间	2	1~50	ms	抬压脚电磁铁的力度保持时的高电平时间
P59	抬压脚关断时间	3	1~50	ms	抬压脚电磁铁的力度保持时的低电平时间
P60	抬压脚保护时间	20	1~120	s	抬压脚工作保护时间
P61	抬压脚延迟时间	50	20~800	ms	电机停转后，多长时间开始抬压脚
P62	放压脚延迟时间	50	20~800	ms	压脚放下后，多少时间才允许启动
P64 *	上电后自动抬压脚时间	0	0-900	s	上电后自动抬压脚的时间
P65	布边传感器功能选择	0	0－1		0：无布边传感器 1：有布边传感器
P66	布边传感器类型选择	2	0－3		0：N 输出低有效 1：N 输出高有效 2：P 输出低有效 3：P 输出高有效
P67	布边速度	800	200-5000	RPM	检测到布头信号后的运转速度
P68	全人工后踏剪线	311			311-剪线开启 非 311-剪线关掉
P69	布边延时启动时间	1000	100-9999	ms	检测到布头信号后的延时启动时间
P70	布头针数	10	1-100		布边传感器信号到针孔之间的距离
P71	布尾针数	10	1-100		布边传感器信号到针孔之间的距离
P73	有无布边传感器	off	On/off		是否有外接布边传感器
P74	倒缝/抬压脚气动选择	0	0－3		0：全部电动 1：倒缝气动 2：压脚气动 3：全部气动
P76	剪线次数	0	0-9999		每剪一次线计数加 1,加满清零
P77	针位信号输出控制	0	0-3		0:上针位输出低电平有效 1:下针位输出低电平有效 2:上针位输出高电平有效 3:下针位输出高电平有效
P98	参数恢复默认值	0000h	0-9999		
P99	工艺参数密码	2222h	0-9999		

5. 故障码/故障原因/故障排除方法表

故障显示代码	故障原因	故障排除方法
Err 1	系统故障	断电后检查机头是否卡住，然后重新上电，如果还不能解决，请联系售后服务人员
Err 2	系统过压	请检查电源电压是否正常？如果电源电压高于265V，关机，请等电源电压恢复正常再开机
Err 3	系统欠压	请检查电源电压是否正常？如果电源电压低于160V，关机，请等电源电压恢复正常再开机
Err 4	电机码盘故障	请检查电机连线是否正常。
Err 5	系统故障	重新上电，如果还不能解决，请联系售后服务人员
Err 6	系统故障	重新上电，如果还不能解决，请联系售后服务人员
Err 7	电机缺相	请检查电机电源线是否脱落或松动。
Err 8	电机堵转	1、 电机电源线是否脱落 2、 机头是否堵住 3、 电机码盘线是否松动 4、 上针位是否正确（有剪线动作的情况下）
Err 9	电机过载	1、 布料是否太厚 2、 机头是否堵住 3、 上针位是否正确（有剪线动作的情况下）
Err 10	电机超速	1.电机码盘信号丢失； 2.光栅信号与电控版本不匹配
Err 11	电机码盘故障	请检查电机码盘线是否松动
Err 12	脚踏脱落故障	请检查脚踏连接线是否松动
Err 13	脚踏上电时被踩下	请检查脚踏是否被卡住
Err 14	电磁铁投入时间过长	1、 上针位是否正确 2、 布料是否太厚或线太粗导致剪线动作不正常
Err 15	制动回路故障	请检查刹车电阻连接线是否松动
Err 17	电磁铁过流故障	电磁铁故障，请检查电磁铁是否损坏或短路。
Err 18	制动回路故障	请检查刹车电阻连接线是否松动
Err 19－21	定位系统故障	电机可继续运转，但无针数记数、针位定位及剪/扫线及倒缝功能 请检查磁钢是否正常。 请检查机头是否被卡住。
Err 22	上位机通信故障	请检查控制面板与驱动器的连线是否正常
Err 23	存储器故障	重新上电，如果还不能解决，请联系售后服务人员
Err 24	机头润滑时间到	加上机器润滑油，然后恢复机头运转时间
Err 25	布边传感器故障	
Err 26	上电时检测到有布	1、 将布拿开机器再重新来一次即可 2、 布边传感器设定错误,重新设定布边传感器类型 3、 布边传感器损坏

如果在现场仍然消除不了，请联系供应商。

6. 七段数码管显示值与实际数值对照表

数字部分：

实际字符	0	1	2	3	4	5	6	7	8	9
显示字符	0	1	2	3	4	5	6	7	8	9

英文字符：

实际字符	A	B	C	D	E	F	G	H	I	J
显示字符	A	b	C	d	E	F	G	H	I	J
实际字符	K	L	M	N	O	P	Q	R	S	T
显示字符	K	L	M	n	o	P	q	r	S	T
实际字符	U	V	W	X	Y	Z				
显示字符	U	v	W	H	Y	Z				

LIST

0. Main technical data.....18
1. Safety notice 18
1.1 Range of use.....19
1.2 Working conditions.....19
1.3 Installation.....19
1.4 Maintenance and inspection 20
1.5 Dangerous tips.....20
1.6 Other safety requirements.....20
2. Installation and adjustment.....20
2.1 Installation of the control box 20
2.2 Adjustment of needle stop position 20
2.3 Adjustment of the reverse pressure for foot presser 21
3. Connection and grounding 21
3.1 Connection of power supply.....21
3.2 Controller connection terminal map 22
3.2.1 General terminal connection diagram(lockstitch. interlock and overlock) 22
3.2.2 Special terminal connection diagram（overlock with the third sensor function）.....23
3.2.3 Special terminal connection diagram（cylinder bed overlock）.....24
4. Operating description of main control box panel 26
4.1 Layout of main control box panel as follows.....25
4.2 Holding state 25
4.3 Sewing mode and each section stitches set 26
4.4 Fore-tacking sewing and stitches set 27
4.5 Back-tacking sewing and stitches set.....28
4.6 Technical parameter set.....28
4.7 Common parameter description.....29
5. Table of error codes/cause/remedy.....34
6. Table of the seven-segment LED display value and actual value comparison.....35

0. Main technical data

Range of voltage：AC220V±15%
Power frequency：50Hz/60Hz

1. Safety notice

1.1 Range of use

The server-motor is designed for industry sewing machine, when using for other applications, please make sure that the users are safe.

1.2 Working conditions

1.2.1 Any fluctuations in the power voltage should be within the range of ±15% according to the control box marked.

1.2.2 In order to avoid error caused by disturbing control box, please keep away from high frequency electromagnetic emitter.

1.2.3 Humidity

a. The ambient temperature should be within the range of 5℃ to 45℃ during using.
b. Avoid exposure to direct sun or outdoors during using.
c. Keep away from the heating (heater) during using.
d. The relative humidity should be within the range of 30% to 95%.

1.2.4 Keep away from flammable gases or explosive during using.

1.3 Installation

1.3.1 Please install the controller correctly according to the introduction.

1.3.2 Please turn off and disconnect the power cord before installation.

1.3.3 Please keep away from rotating parts when installing the power cord, the distance should be at least 3cm.

1.3.4 In order to prevent noise interference or electric accident, make sure that the sewing machine and the control box are connected to ground. ⚠

1.3.5 Make sure that the fluctuation in the power voltage should be within the range of ±15% according to the control box marked before turning on.

1.4 Maintenance and inspection

1.4.1 Please turn off before maintenance or inspection.

1.4.2 Make sure that the power switch is turned off when turning the machine head, replacing needle or rotary hook.

1.4.3 It is very dangerous because of high voltage inside the control box, if you want to uncover the control box, more than 5 minutes is needed to wait after power off.

1.4.4 Maintenance and inspection of the sewing machine should only be carried out by a qualified technician.

1.4.5 Forbidden to do maintenance and inspection when the motor is running.

1.4.6 All components for repair should be provided or approved before using.

1.5 Dangerous tips

This symbol indicates something you should be careful of when installing, failing to follow the instruction could cause injury when using the machine physical damage to equipment and surroundings.

1.6 Other safety requirements

1.6.1 Please operate the sewing machine at low-speed and check whether the direction of rotation is correct for the first time to power on.

1.6.2 Please don’t touch the up wheel ,needle and other action parts when the sewing machine is running .

1.6.3 To prevent physical contact, all action parts must be isolated by protective devices, and please don’t put anything into the devices.

1.6.4 Forbidden to operate at the circumstance of motor hood and other safety devices removed.

1.6.5 Don’t let motor or control box fall to ground.

1.6.6 Don’t let liquid ,such as tea, flow into the control box or motor.

2. Installation and adjustment

2.1 Installation of the control box

2.1.1 Install the control box and the foot-controllor beneath the table.

2.1.2 Please connect the pedal with the control device

2.1.3 Installation diagram

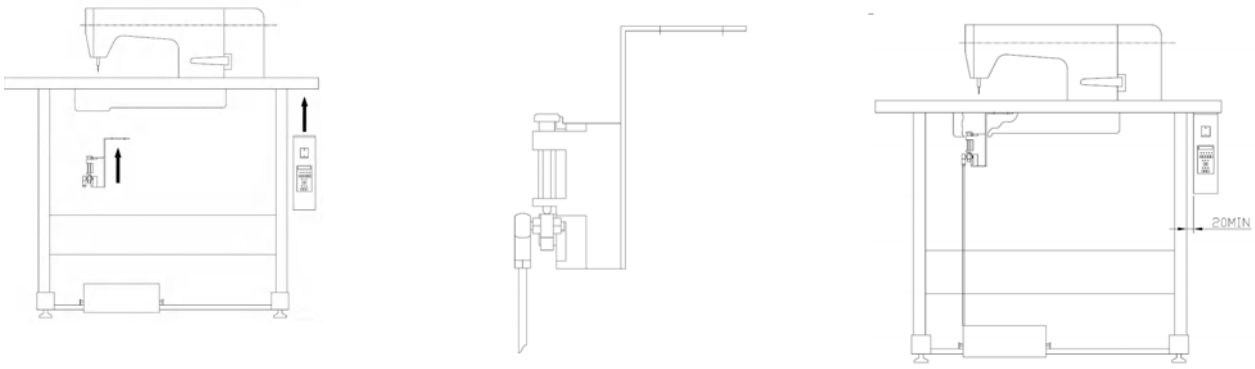

2.2 Adjustment of needle stop position

2.2.1 Release the magnet fixed screw of the hand wheel, re-fix after position adjustment.

2.2.2 If the actual needle stop position exceed the expected needle up position, adjust the magnet fixed plate on the indicative direction of the hand wheel rotation, conversely, adjust the hand wheel on the reverse direction of hand wheel rotation.

2.3 Adjustment of the reverse pressure for foot presser

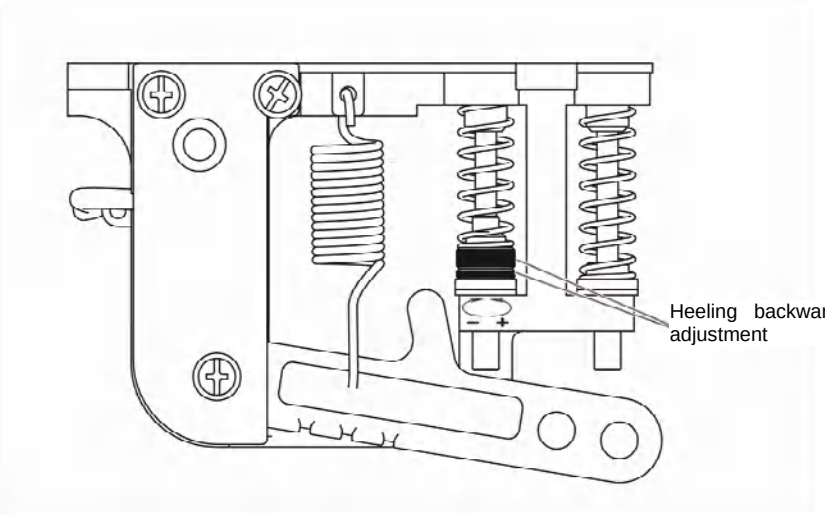

Adjustment requirements	Adjustment result
Adjustment of the reverse pressure for foot presser	Rotate the bolt at up, the reverse pressure will be heavy. Rotate the bolt at down, the reverse pressure will be light.

3. Connection and grounding

3.1 Connection of power supply

The controller is suitable for power supply of AC220V (one phase), the fluctuation of input voltage is within ±15% as the plate marked.

	Notice: The yellow /green power line are connected to ground, the connection to ground must be well done for insurance of safety and devices reliable to work.

3.2 Controller connection terminal map）

3.2.1 General terminal connection diagram(lockstitch. interlock and overlock)

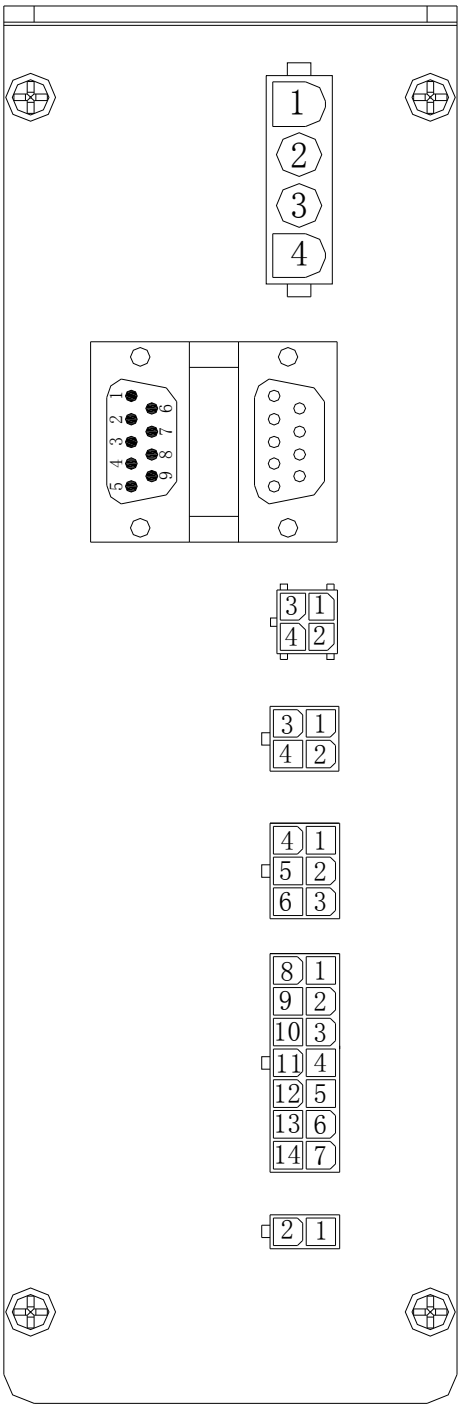

1. Ground
2. U phrase output
3. V phrase output
4. W phrase output

1. +5V
2. speed signal
3. stand foot pedal trimming control
4. stand foot pedal identify
5. GND
6. GND
7. GND
8. stand foot pedal foot presser control
9. +5V

1. TXD 2. +12V
2. RXD 4. GND

1. NC 2. safety switch
3. NC 4. +5v

1. needle position output 2. GND 3. GND
4. cloth edge sensor signal 5. GND
6. cloth edge sensor power

1. +30V 2.+30V 3.ground 4.+30V
5. GND 6. +30 PWM 7. GND 8.trimming output
9. thread sweep output 10. +30V 11.NC
12. manual reverse sewing switch
13. reverse sewing output
14. +5V lighting

1. +30V PWM
2. foot presser output

3.2.2 Special terminal connectiondiagram（overlock with the third sensor function）

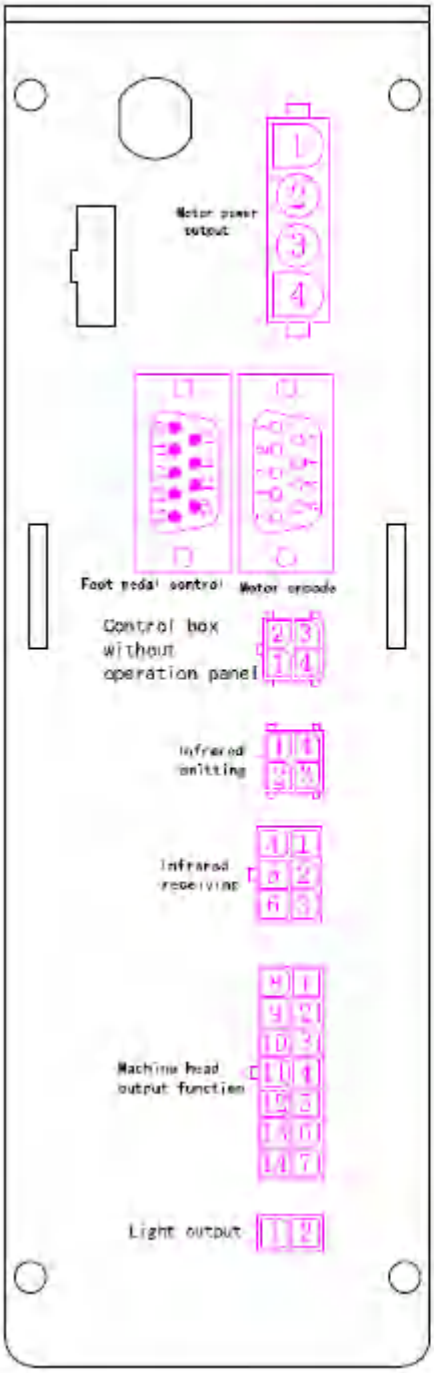

1	Ground			Motor power output			
2	U phrase output						
3	V phrase output						
4	W phrase output						
Foot pedal control				Motor encode			
10	+5V	15	GND	1	+5V	6	UH
11	speed signal	16	GND	2	upper needle position	7	VH
12	stand foot pedal trimming control	17	Stand foot pedal foot presser control	3	lower needle position	8	WH
13	Stand foot pedal identify	18	+5V	4	Encoder B	9	GND
14	GND			5	Encoder A		
2	RXD	3	TXD	Control box without operation panel			
1	GND	4	+12V				
1	Before the Infrared Receiving	4	+5V	Infrared emitting			
2	Infrared emitting	3	After infrared emitting				
4	Before Infrared receiving	1	+5V	Infrared receiving			
5	Infrared receiving	2	+5V				
6	After infrared Receiving	3	+5V				
8	Thread trimmer solenoid	1	+30V	Machine head output function			
9	Presser foot solenoid	2	+30V				
10	Air suction	3	Reserved				
11	Puller solenoid	4	Reserved				
12	Presser foot safety switch	5	GND				
13	Manual switch	6	GND				
14	Operation bed safety switch	7	+5V				
1	+12V	2	Lighting output	Light output			

3.2.3 Special terminal connection diagram（cylinder bed overlock）

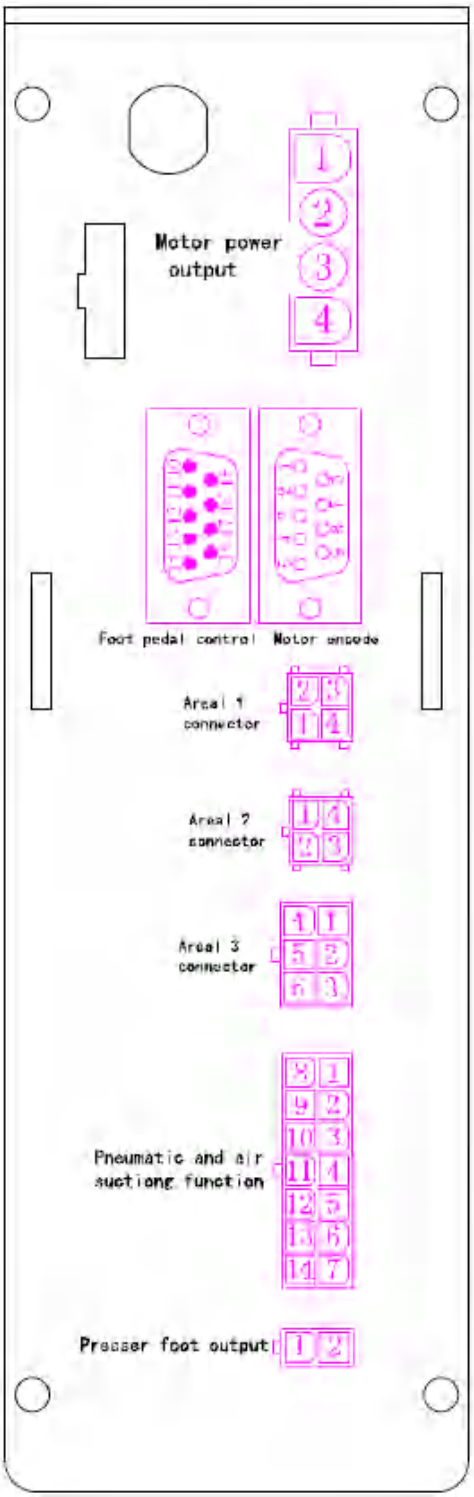

1	Ground			Motor power output			
2	U phrase output						
3	V phrase output						
4	W phrase output						
Foot pedal control				Motor encode			
10	+5V	15	GND	1	+5V	6	UH
11	speed signal	16	GND	2	upper needle position	7	VH
12	stand foot pedal trimming control	17	Stand foot pedal foot presser control	3	lower meedle position	8	WH
13	Stand foot pedal identify	18	+5V	4	Encoder B	9	GND
14	GND			5	Encoder A		
2	Reserved	3	Reserved	Area1 1 connector			
1	Reserved	4	Reserved				
1	Reserved	4	Reserved	Area1 2 connector			
2	Reserved	3	Reserved				
4	Reserved	1	Reserved	Area1 3 connector			
5	Reserved	2	Reserved				
6	Reserved	3	Reserved				
8	Reserved	1	Reserved	Pneumatic and air suctiong function			
9	Knee control switch	2	+30V				
10	Reserved	3	Reserved				
11	Reserved	4	Reserved				
12	Presser foot safety switch	5	GND				
13	Manual switch	6	GND				
14		7	+5V				
1	+12V	2	presser foot output	Presser foot output			

4. Operation description of the main control box panel

4.1 Layout of the main control box panel as follows

Layout of the main control box panel as follows, it includes six digital tube (T1-T6),eleven LED and ten buttons, the panel includes five states: holding mode, sewing mode set, fore-tacking mode set, back-tacking mode set, technical parameter set.

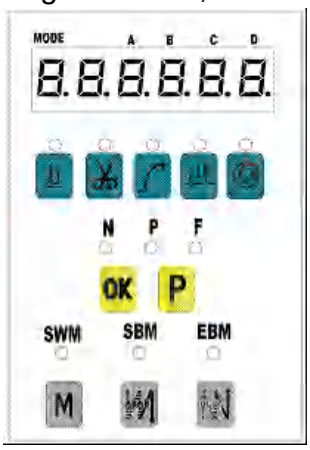

4.2 Holding state

1.The panel displays holding state when power on, N、P、F、SWM、SBM、EBM are turned off, the LED lamps at the top of function keys display according to the current parameter.

T1,T2 digital tube display current sewing mode(00:free sewing; 01:constant-dimension sewing; 02: four- segment sewing ; 03: seven -segment sewing; 04: eight-segment sewing; 05:W sewing),other digital tubes display “-”。Take current sewing mode free sewing for example, it displays as follows :

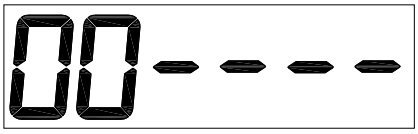

2.Choose button, the corresponding functions of foot presser, thread trimmer ,slow start-up, needle stop position,automatic triggers and so on will be set or canceled, meanwhile the corresponding LEDs are on or off.

4.3 Sewing mode and each section stitches setting

Press button at the holding state, then it goes into sewing mode set state: SWM is on, and other LEDs are off.

T1,T2 digital tube display current sewing mode(00:free sewing;01: constant-dimension sewing;02:four-segment sewing; 03:seven-segment sewing; 04:eight-segment sewing; 05:W sewing), if it is constant-dimension sewing or multi-segment sewing ,T3 digital tube display current section code “E、F、G、H”,T5 and T6 digital tube display current section stitch.

Take four-segment sewing for example, it displays as follows:

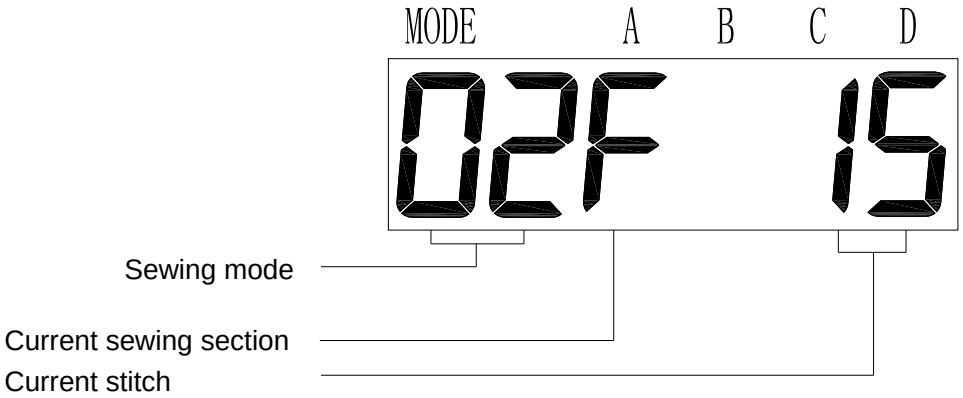

It doesn’t display current sewing section if it is at free sewing .

Selection of sewing mode、section number and stitches:

1.Press button, T1,T2 digital tube can display circulately current sewing mode among 00~05;

2. Press button ,T3 digital tube can display circulatly current section number among “E、F、G、H”.

3. Press or button, corresponding stitches added 10 or 1 and circulae among 0-99; 、 is invalid; press button, it returns to the holding mode .

4.4 Fore- tacking sewing mode and stitches set

1. Press button at the state of holding, sewing mode set or fore-tacking set, it all can go into the state of fore-tacking set, meanwhile SBM is on, other LED is off, T1 display current fore-tacking sewing mode.

2.Press button, T1 digital tube display circularly fore-tacking sewing mode : 0(no fore-tacking sewing),1(single fore-tacking sewing),2(double fore-tacking sewing) 3(four fore-tacking sewing),T3、T4 display current tacking sitches respectively, take double fore-tacking sewing for example ,it displays as follows:

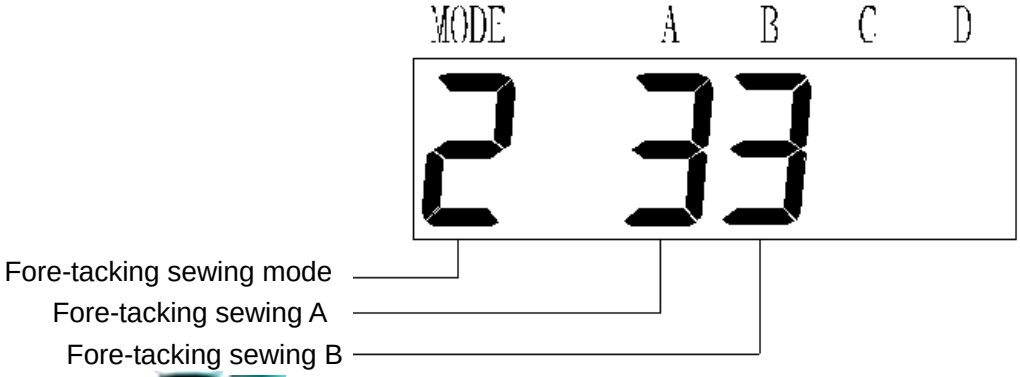

Press button, the corresponding stitches above added 1,switch circularly among 0-F ,press button, it returns to the holding state.

4.5 Back-tacking sewing and stitches set

1.Press button at the state of holding, sewing mode set or back-tacking set,it all can go into back-tacking mode setting state, meanwhile EBM is on, other LED is off, T2 display current back-tacking mode .

2. Press button, T2 digital tube display circularly back-tacking sewing mode: 0(no back-tacking sewing)、1（single back-tacking sewing）、2（double back-tacking sewing）、3（four back-tacking sewing）.

3. T5、T6 display current stitches of back-tacking sewing respectively ,take double back-tacking sewing for example ,it displays as follows:

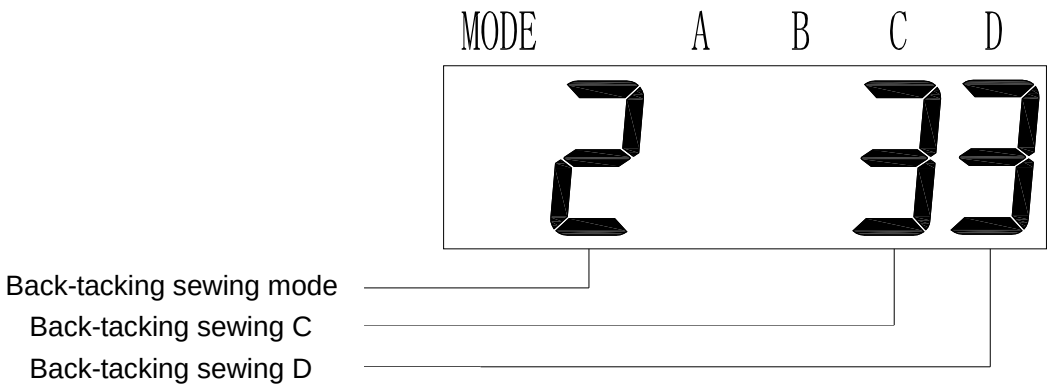

Press button, the corresponding stitches above added 1, switch circularly among 0-F, press button, it returns to the holding state.

4.6 Technical parameter set

4.6.1 Password input

1. Press twice continually at the holding state, P light is on ,other LED is off, it goes into the state of technical parameter setting, digital tube display password input as follows :

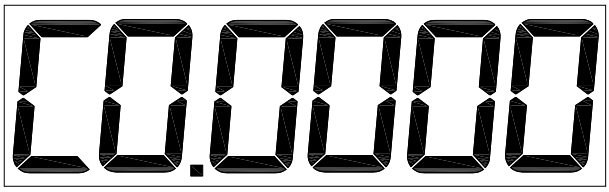

2. Press button,it can input password, the inital input password is 2222,press to confirm, if the entered password is correct ,then it goes into the state of modifying technical parameter ,display as follows :

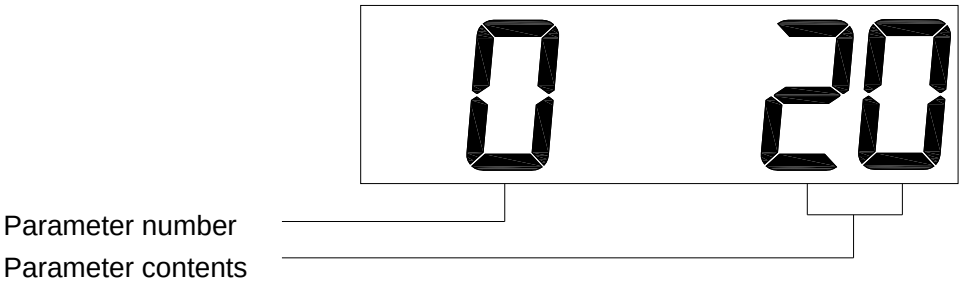

4.6.2 Modify the technical parameter

1. At the technical parameter setting state, is sequence increasing key,press this key can do operation of added 1(sequence:0-99)

2.At the technical parameter setting state, is sequence descending key,press this key can do operation of minus 1(sequence :0-99).

3. are parameter setting key at this state, press the key once, parameter of corresponding bit adds 1(it will not continue if the parameter overflow after adding);press key to save the parameter after setting, press key again to return to the holding state .

4.7 Common parameter description

The parameters marked with *mean that they should re-power after amended.
(Unit: RPM; ms ; s ; hour)

Sequence	Function parameter	Default	Setting range	unit	Parameter description
P0	Pedal slope	20	1~100	%	The bigger the slope is, the larger the low-speed region is, and the faster the speed change is; the smaller the slope is, the narrower the low-speed region is, and the lower the speed change is.
P1	Speed proportion	8	1~8		Presser proportion of the maximum speed of reverse sewing. The maximum seed is equally divided into eight parts, current speed can be modified through adjusting parts.
P2	System minimum speed	200	150~500	RPM	The minimum speed of machine head when sewing.
P3	Maximum speed of the reverse sewing	4000(lockstitch series) 3000(double needle series) 5500(overlock stitch series)	150~5000 150~4000 150~7500	RPM	The maximum speed of machine head at the reverse sewing.
P4	Fixed sewing speed	3500(lockstitch series) 3000(double needle series)	200~4000	RPM	Sewing speed of fixed sewing speed.
P5	Fore-tacking sewing speed	1800	200~3000	RPM	Sewing speed of fore-tacking.
P6	Back-tacking sewing speed	1800	200~3000	RPM	Sewing speed of back-tacking.

P7	Suspend when the fore-tacking finished.	off	On/off		Pedal trigger is needed to continue operating when suspend at fore-tacking finishing.
P8	Suspend when the back-tacking finished.	off	On/off		Pedal trigger is needed to continue operating when suspend at back-tacking finishing.
P9	W sewing speed	1800	200~3000	RPM	Sewing speed at W sewing mode.
P15	Maximum speed of reverse sewing.	2500	200~3000	RPM	Maximum speed of reverse sewing.
P16	Working time of thread sweep	50	20~1000	ms	Working time of thread sweep electromagnet.
P17	Whether the reverse sewing key will be absorbed when the motor stops.	On	On/off		When the motor stops, and the key pressed, whether the electromagnet act or not.
P18	Stitch/speed priority	0	0~1		Stitch or speed priority setting during sewing: 0:stitch priority 1:speed priority
P19*	Foot presser switch	On	On/off		Turn on/off the function of foot presser.
P21	Selection of counting function	0	0~2		0:Non-counting function 1:Bobbin thread counting function 2:Trimming thread counting function
P22	Slow-startup counting	2	0~15		Stitches when sewing at slow -startup speed
P23	Slow-startup speed	500	200~3000	RPM	The sewing speed at slow-startup.
P24	Bobbin–thread base number	10	1~100		How many stitches changes on bobbin–thread, the current count change one unit.
P25	Total number of bobbin–thread	2000	1~9999		Total number of bobbin-thread setting.
P26	current counting	2000	0~9999		Current amount of bobbin -thread.
P27	Full PWM on time of reverse sewing	200	20~500	ms	Initial startup time of reverse sewing electromagnet.
P28	PWM on time of reverse sewing	2	1~50	ms	PWM on time of reverse sewing when the electromagnet holding on.

P29	PWM off time of reverse sewing	2	1~50	ms	PWM off time of reverse sewing when the electromagnet holding on.
P34*	Automatic finding needle position	On	On/off		Whether automatic finding the needle up position at PWM on time.
P36	Trimming speed	250	200~500	RPM	Operating speed when trimming.
P37*	Automatic lift foot presser of half back step	on	On/off		Start or cancel automatic lift foot presser of half back step.
P39	Speed limitation of the first stitch	3000	200-4000	RPM	The limitation for the speed of the first sewing stitch.
P40	Fore-tacking sewing compensation parameter 1	7（lockstitch serie） 12（two-needle lockstitch serie ）	0-16		Fore-tacking stitch sewing compensation parameter 1.
P41	Fore-tacking sewing compensation parameter 2	5	0-16		Fore-tacking sewing stitch compensation parameter 2.
P42	Back-tacking sewing compensation parameter 1	7（lockstitch series） 12（two-needle lockstitch series）	0-16		Back-tacking sewing stitch compensation parameter 1.
P43	Back-tacking sewing compensation parameter2	5	0-16		Back-tacking sewing stitch compensation parameter 2.
P44	W sewing compensation parameter 1	7（lockstitch series） 12（two needle lockstitch series）	0-16		W sewing stitch compensation parameter 1.
P45	W sewing compensation parameter 2	5	0-16		W sewing stitch compensation parameter 2.
P46	Manual test mode switch	0	0/1		0： normal operation mode 1： test mode
P47	Manual test mode switch	2000	100-9999	ms	The interval time between each operation at test mode
P48	Operating time of test mode	2000	100－9999	ms	Each operating time of the test mode.

P49*	Motor operation direction	1	0/1		0:CCW 1:CW
P51*	Scissors mode	0	0/1		0: built-in scissors 1: built-out scissors
P52	Working time of built-out scissors	100	30~9999	ms	Working time of built-out scissors.
P53	Working time of external thread sweep	70	20~9999	ms	Working time of external thread sweep.
P54	Type of safety switch signal	0	0/1		0: open 1:shut
P56	Working time of machine head	0	0~9999	hour	How many hours the machine head have worked.(add 1 per hour)
P57	Startup time of lifting foot presser	250	20~1000	ms	Initial startup time of lifting foot presser electromagnet.
P58	PWM on time of lifting foot presser	2	1~50	ms	PWM on time of lifting foot presser when the electromagnet holding on.
P59	PWM off time of lifting foot presser	3	1~50	ms	PWM off time of lifting foot presser when the electromagnet holding on.
P60	Protection time of foot presser lifting	20	1~120	s	Protecting time of foot presser lifting during working.
P61	Delay time of lifting foot presser	50	20~800	ms	How long will it be to start to lift foot presser after the motor stop.
P62	Delay time of downing foot presser	50	20~800	ms	How long is it allowed to startup after foot presser is down.
P64*	Automatic foot presser lifting time with power on	0	0-900	s	Time of automatic lifting foot presser with power on.
P65	Function selection of cloth edge sensor	0	0－1		0：no cloth edge sensor 1：cloth edge sensor
P66	Selection of cloth edge sensor type	2	0－3		0：N output is effective at low 1：N output is effective at high 2：P output is effective at low 3：P output is effective at high
P67	Speed of cloth edge	800	200-5000	RPM	Operating speed when detecting cloth edge signal.
P68	Thread trimming(bac k step) Manual type	311			311 thread trimmer turned on Non 311, thread trimmer turns off

P69	Delay-startup time of cloth margin	1000	100-9999	ms	Delay-startup time when detecting cloth head signal.
P70	Stitch of cloth head	10	1-100		The distance between Cloth edge sensor signal and needle hole.
P71	Stitches of fabric edge	10	1-100		Distance of the fabric edge sensor signal to the needle plate hole
P73	Cloth edge sensor	off	On/off		Whether there is an external cloth edge sensor.
P74	Selection of back stitch/ foot presser lifting air-operated	0	0—3		0：all electric-operated 1：reversing air-operated 2：presser foot air-operated 3：all air-operated
P76	Number of trimming	0	0-9999		Adding 1 to the counter per trimming, clear to zero when the counter is full.
P77	Control of needle position signal output	0	0-3		0: The output of needle up position is effective at low 1: The output of needle down position is effective at low 2: The output of needle up position is effective at high 3: The output of needle down position is effective at high
P98	Parameter recover to default	0000h	0-9999		
P99	Technical parameter password	2222h	0-9999		

5. Table of error codes/cause/remedy

Error code	Cause	Remedy
Err 1	System error	Check whether the machine head is stuck, and then re-power, if the malfunction have not been solved yet, please contact after-sale service.
Err 2	Overload voltage	Please check whether the power supply voltage is normal, if the power supply voltage is higher than 265V, turn off the machine, and restart the machine until the power supply voltage is normal .
Err 3	Download voltage	Please whether check the power supply voltage is normal, if the power supply voltage is lower than 160V, turn off the machine, and restart the machine until the power supply voltage is normal.
Err 4	Motor code wheel error	Please check whether the motor electrical connection is normal.
Err 5	System error	Re-power , if the malfunction have not been solved yet ,please contact the after-sale service person.
Err 6	System error	Re-power , if the malfunction have not been solved yet ,please contact the after-sale service person.
Err 7	Motor lack phase	Please check whether the motor power cord is off or loose.
Err 8	Motor locked-rotor	1. Check whether the motor power cord is off. 2. Check whether the machine head is stuck. 3. Check whether motor code wheel cord is loose. 4.Check whether the needle up position is correct (at the case of thread trimming movement).
Err 9	Motor overload	1. Check whether the fabric is too heavy. 2. Check whether the machine head is stuck. 3. Check whether the needle up position is correct (at the case of thread trimming movement).
Err 10	Motor over speed	1.Motor encode signal lost 2. Grating signal doesnot match the control box version
Err 11	Motor code wheel error	Please check whether the motor code wheel cord is loose.
Err 12	Foot-controller dropped off error	Please check whether the foot-controller connection is loose.
Err 13	Foot-controller was off when turning on the electricity	Please check whether the foot-controller is stuck.
Err 14	The time of using Electromagnet is too long	1. Check whether the needle up position is correct. 2. Check whether the fabric is too heavy or the line is too thick to cut the line normally.
Err 15	Brake circuit error	Please check whether the brake resistor cable is loose.
Err 17	Electromagnet overload current error	Electromagnet error, please check whether the electromagnet is broken or short circuit.
Err 18	Brake circuit error	Please check whether the brake resistor cable is loose.

Err 19－21	Located system error	Motor can continue to operate, but there are no needle count, needle location ,trimming/sweep and reverse stitch function. Please check whether the alnico is normal. Please check whether the machine head is stuck.
Err 22	Machine up position communication error	Please check whether the connection of the control panel and the drive is normal.
Err 23	Memory error	Re-power, if the error has not been solved yet ,please contact the after-sale service person.
Err 24	Machine head lubrication time is up	Add the lubrication oil , and then recover the operate time of machine head.
Err 25	Fabric edge sensor error	
Err 26	Detected cloth when turning on the electricity	1. Take the cloth away and retry. 2.The cloth edge sensor setting is wrong, reset the type of cloth edge sensor. 3.The cloth edge senor is broken.

If the error still can not be resolve, please contact the supplier .

6. Table of the Seven-Segment LED display value and actual value comparison

Figure part：

Actual character	0	1	2	3	4	5	6	7	8	9
Display character	0	1	2	3	4	5	6	7	8	9

English character：

Actual character	A	B	C	D	E	F	G	H	I	J
Display character	A	b	C	d	E	F	G	H	I	J
Actual character	K	L	M	N	O	P	Q	R	S	T
Display character	t	L	M	n	o	P	q	r	S	T
Actual character	U	V	W	X	Y	Z				
Display character	U	v	W	H	Y	Z				